TABLE OF CONTENTS

PAGE(S)	CONTENTS
1	TITLE1
2	TITLE2
3	BLOCK
4	PCIE TOPO
5	CLOCK TOPO
6	I2C TOPO
7	VPP TOPO
8	I3C TOPO
9	RST TOPO
10	SPI TOPO
11	CPU0_MEM_CHA
12	CPU0_MEM_CHB
13	CPU0_MEM_CHC
14	CPU0_MEM_CHD
15	CPU0_MEM_CHE
16	CPU0_MEM_CHF
17	CPU0_MEM_CHG
18	CPU0_MEM_CHH
19	CPU0_MEM_CHI
20	CPU0_MEM_CHJ
21	CPU0_MEM_CHK
22	CPU0_MEM_CHL
23	CPU0_PCIE_GLINK
24	CPU0_PCIE_PLINK
25	CPU0_ESPI&USB
26	CPU0_MISC1
27	CPU0_MISC2
28	CPU0_STRAP
29	CPU0_POWER_PIN1
30	CPU0_POWER PIN2
31	CPU0_POWER PIN3
32	CPU0_POWER PIN4
33	CPU0_POWER PIN5
34	CPU0_POWER PIN6
35	CPU0_POWER PIN7
36	CPU1_MEM_CHA
37	CPU1_MEM_CHB
38	CPU1_MEM_CHC
39	CPU1_MEM_CHD
40	CPU1_MEM_CHE

PAGE(S)	CONTENTS
41	CPU1_MEM_CHF
42	CPU1_MEM_CHG
43	CPU1_MEM_CHH
44	CPU1_MEM_CHI
45	CPU1_MEM_CHJ
46	CPU1_MEM_CHK
47	CPU1_MEM_CHL
48	CPU1_PCIE_GLINK
49	CPU1_PCIE_PLINK
50	CPU1_ESPI&USB
51	CPU1_MISC1
52	CPU1_MISC2
53	CPU1_STRAP
54	CPU1_POWER_PIN1
55	CPU1_POWER_PIN2
56	CPU1_POWER_PIN3
57	CPU1_POWER PIN4
58	CPU1_POWER PIN5
59	CPU1_POWER PIN6
60	CPU1_POWER PIN7
61	CPU0_DIMM_CHA
62	CPU0_DIMM_CHB
63	CPU0_DIMM_CHC
64	CPU0_DIMM_CHD
65	CPU0_DIMM_CHE
66	CPU0_DIMM_CHF
67	CPU0_DIMM_CHG
68	CPU0_DIMM_CHH
69	CPU0_DIMM_CHI
70	CPU0_DIMM_CHJ
71	CPU0_DIMM_CHK
72	CPU0_DIMM_CHL
73	CPU1_DIMM_CHA
74	CPU1_DIMM_CHB
75	CPU1_DIMM_CHC
76	CPU1_DIMM_CHD
77	CPU1_DIMM_CHE
78	CPU1_DIMM_CHF
79	CPU1_DIMM_CHG
80	CPU1_DIMM_CHH

PAGE(S)	CONTENTS
81	CPU1_DIMM_CHI
82	CPU1_DIMM_CHJ
83	CPU1_DIMM_CHK
84	CPU1_DIMM_CHL
85	CPU0_VR_CORE0_CONTROLLER
86	CPU0_VR_CORE0_MISC
87	CPU0_CORE0_DRMOS1
88	CPU0_CORE0_DRMOS2
89	CPU0_SOC_DRMOS
90	CPU0_CORE0_CAP1
91	CPU0_CORE0_CAP2
92	CPU0_VR_CORE1_CONTROLLER
93	CPU0_VR_CORE1_MISC
94	CPU0_CORE1_DRMOS1
95	CPU0_CORE1_DRMOS2
96	CPU0_SUS_DRMOS
97	CPU0_CORE1_CAP1
98	CPU0_CORE1_CAP2
99	CPU0_VR_VDDIO_CONTROLLER
100	CPU0_VDDIO_DRMOS1
101	CPU0_VDDIO_CAP
102	CPU1_VR_CORE0_CONTROLLER
103	CPU1_VR_CORE0_MISC
104	CPU1_CORE0_DRMOS1
105	CPU1_CORE0_DRMOS2
106	CPU1_SOC_DRMOS
107	CPU1_CORE0_CAP1
108	CPU1_CORE0_CAP2
109	CPU1_VR_CORE1_CONTROLLER
110	CPU1_CORE1_DRMOS1
111	CPU1_CORE1_DRMOS2
112	CPU1_CORE1_CAP1
113	CPU1_CORE1_CAP2
114	CPU1_VR_VDDIO_CONTROLLER
115	CPU1_VDDIO_DRMOS1
116	CPU1_VDDIO_CAP
117	POL_CPU0_VDD_18_S5
118	POL_CPU1_VDD_18_S5
119	POL_CPU0_VDDC_33_S5
120	POL_CPU1_VDDC_33_S5

MODULE=---
FUNCTION=---

CNIT TECHNOLOGIES CO.,LTD.

BOARD NAME	MB-CADT24D_VERA	DRAWINGNO	CNIT0302K1XKDL
DESIGNED	yujianjiang00259	DATE <DATE_DN>	SHEET 1 OF 200
REVIEWED	<REVIEWED>	DATE <DATE_RW>	Thu Jul 24 08:53:54 2025

REV

THIS DOCUMENT AND THE TECHNICAL DATA DISCLOSED ARE PROPRIETARY TO CNIT TECHNOLOGIES CO., LTD. AND SHALL NOT BE DUPLICATED USED RELEASED OR DISCLOSED WITHOUT EXPRESSING WRITTEN PERMISSION.

TABLE OF CONTENTS

PAGE(S)	CONTENTS
121	POL_P5V_STBY
122	POL_P3V3_STBY
123	LDO_P1V8
124	P12V_STBY_MP5022
125	P12V_CPU0_5991
126	P12V_CPU1_5991
127	P12V_CPU0_DIMM_5991
128	P12V_CPU1_DIMM_5991
129	POWER_MONITOR
130	BUSBAR
131	100M_CLK_GEN
132	GEN POWER
133	CLK_DB2000_1
134	CLK_DB2000_2
135	MCIO_P0G3
136	MCIO_P0G3_AC
137	MCIO_P0P0
138	MCIO_P0P1
139	MCIO_P0P2
140	MCIO_P0P3
141	MCIO_P0_P0P1_AC
142	MCIO_P0_P2P3_AC
143	MCIO_P1G1
144	MCIO_P1G1_AC
145	MCIO_P1P0
146	MCIO_P1P1
147	MCIO_P1P2
148	MCIO_P1P3
149	MCIO_P1_P0P1_AC
150	MCIO_P1_P2P3_AC
151	MCIO_P1P4
152	P3V_BAT
153	RTC LDO& BMC RTCCLK
154	P0_DIMM_I3C
155	P1_DIMM_I3C
156	BMC_I2C1_PCA9545&PCA9617
157	BMC_I2C2&I2C3_PCA9548
158	I2C4_PCA9545
159	I2C4_PCA9548
160	P12V_ISENSE

PAGE(S)	CONTENTS
161	I2C_APML/SEC_LEVEL_SHIFT
162	I2C_APML/SEC_MUX
163	CPU0_HP_ALERT
164	CPU0_I2C5_PCA9548
165	CPU0_I2C_VPP_1
166	CPU0_I2C_VPP_2
167	CPU0_I2C_VPP_3
168	SLIMSAS_SATA_1
169	JTAG & HDT_1
170	JTAG & HDT_2
171	JTAG & HDT_3
172	JTAG & HDT_4
173	JTAG & HDT_5
174	JTAG & HDT_6
175	CMU_CONNECTOR
176	CPLD1_1
177	CPLD1_2
178	CPLD1_3
179	CPLD1_4
180	SERIES RESISTORS
181	PRODUCT_ID
182	ADC1
183	ADC2
184	MECHANICAL
185	DISCHARGE
186	TPM
187	TMP
188	CPLD2_1
189	CPLD2_2
190	CPLD2_3
191	CPLD2_4
192	CPLD_JTAG
193	INTRUDER_DET
194	SATA CONTROLLER
195	SATA CONTROLLER POWER CAP
196	SATA CONTROLLER POWER
197	BIOS_FLASH_SW3
198	BIOS_FLASH_SW1
199	BOIS_FLASH_SW2
200	BIOS_FLASH

PAGE(S)	CONTENTS

MODULE=---
FUNCTION=---

CNIT TECHNOLOGIES CO.,LTD.

BOARD NAME	MB-CADT24D_VERA		DRAWINGNO CNIT0302K1XKDL	
DESIGNED	yujianjiang00259	DATE <DATE_DN>	SHEET 2 OF 200	REV
REVIEWED	<REVIEWED>	DATE <DATE_RW>	Thu Jul 24 08:54:07 2025	

THIS DOCUMENT AND THE TECHNICAL DATA DISCLOSED ARE PROPRIETARY TO CNIT TECHNOLOGIES CO., LTD. AND SHALL NOT BE DUPLICATED USED RELEASED OR DISCLOSED WITHOUT EXPRESSING WRITTEN PERMISSION.

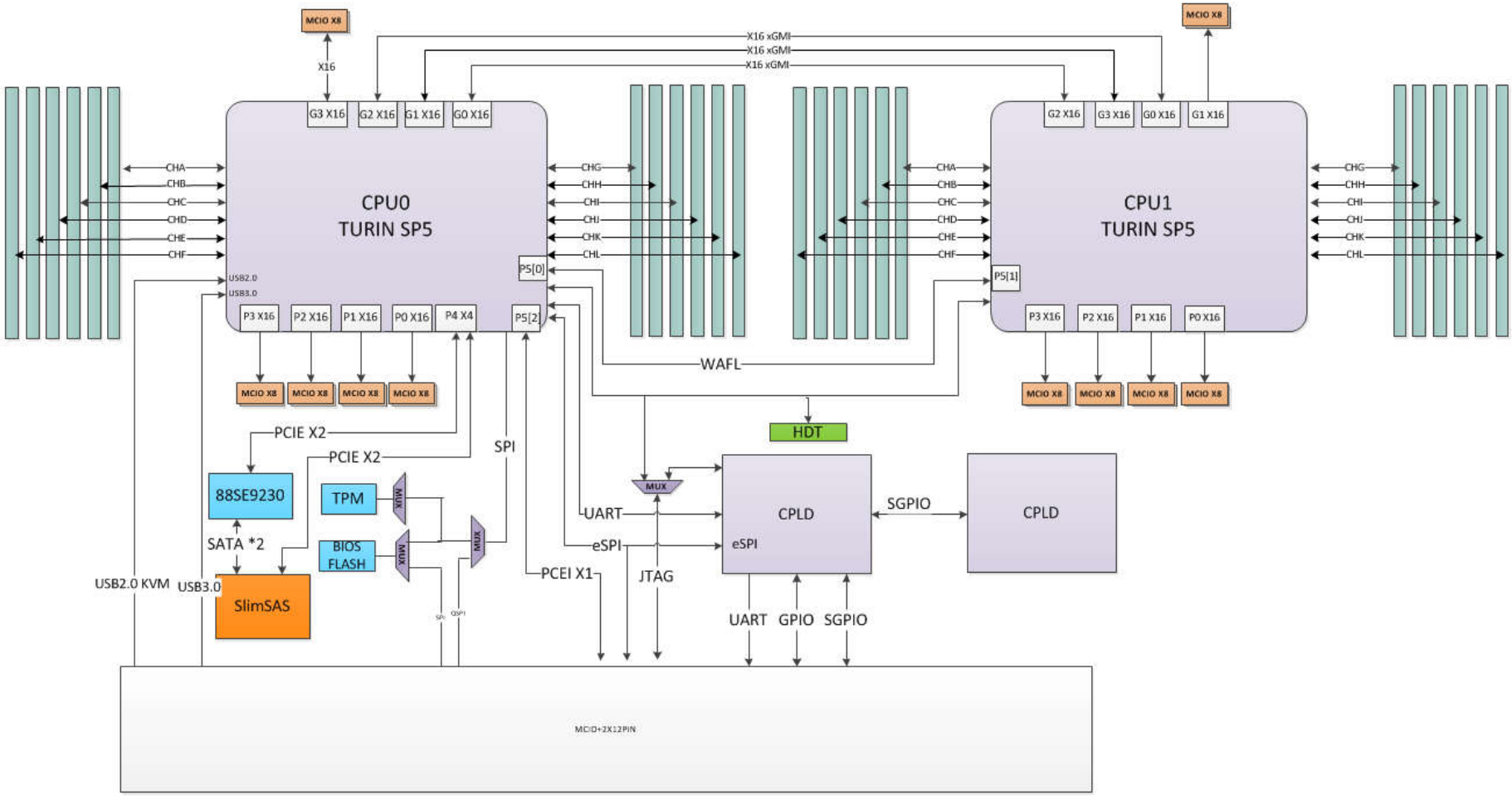

MODULE=---

FUNCTION=---

CNIT TECHNOLOGIES CO.,LTD.				
BOARD NAME MB-CADT24D_VERA			DRAWINGNO CNIT0302K1XKDL	
DESIGNED	yujianjiang00259	DATE <DATE_DN>	SHEET 3 OF 200	REV
REVIEWED	<REVIEWED>	DATE <DATE_RW>	Wed Jul 23 16:03:57 2025	

THIS DOCUMENT AND THE TECHNICAL DATA DISCLOSED ARE PROPRIETARY TO CNIT TECHNOLOGIES CO., LTD. AND SHALL NOT BE DUPLICATED USED RELEASED OR DISCLOSED WITHOUT EXPRESSING WRITTEN PERMISSION.

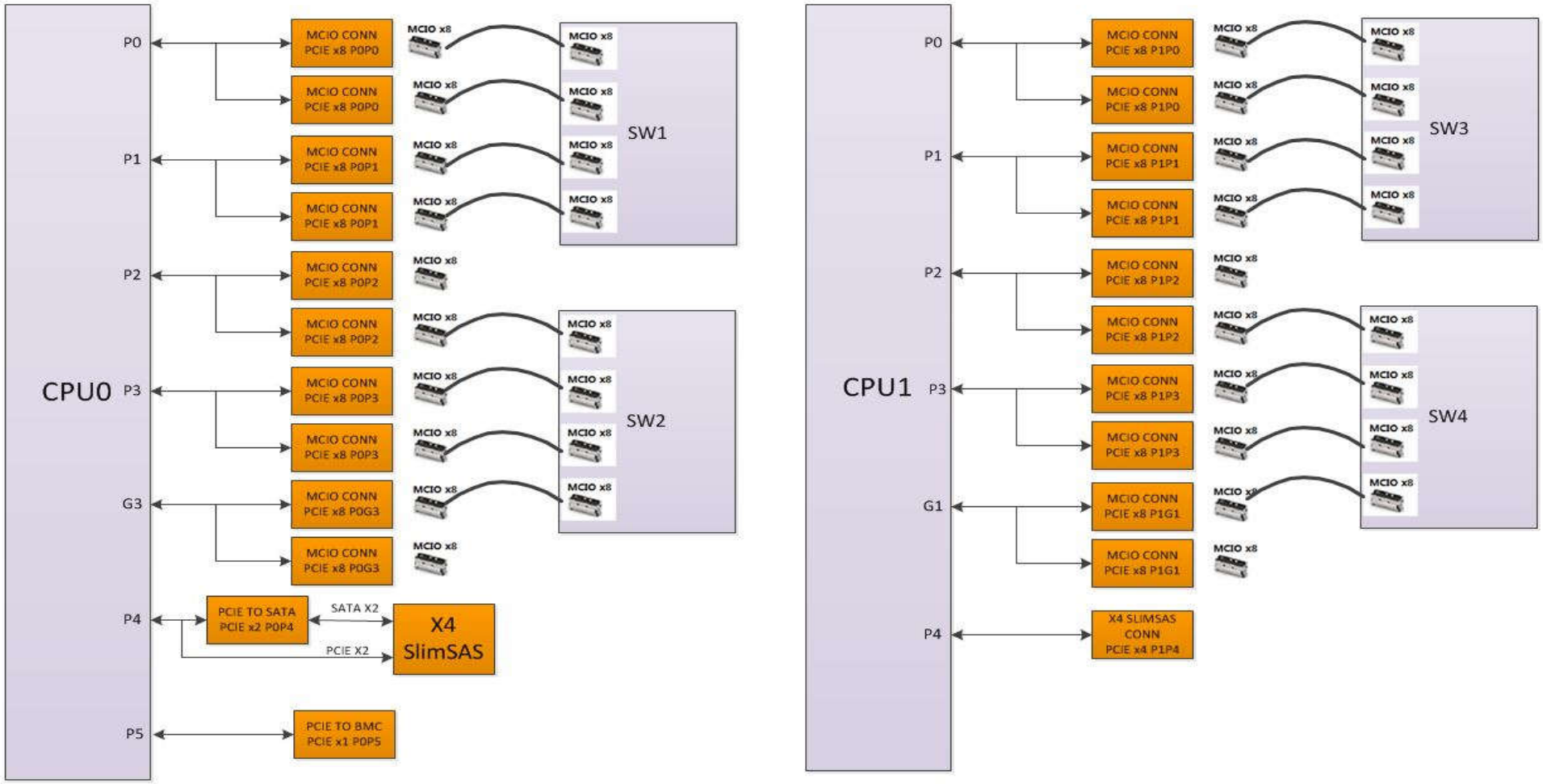

MODULE=---
FUNCTION=---

CNIT TECHNOLOGIES CO.,LTD.				
BOARD NAME MB-CADT24D_VERA			DRAWINGNO CNIT0302K1XKDL	
DESIGNED	yujianjiang00259	DATE <DATE_DN>	SHEET 4 OF 200	REV
REVIEWED	<REVIEWED>	DATE <DATE_RW>	Fri Aug 01 17:19:56 2025	

THIS DOCUMENT AND THE TECHNICAL DATA DISCLOSED ARE PROPRIETARY TO CNIT TECHNOLOGIES CO., LTD. AND SHALL NOT BE DUPLICATED USED RELEASED OR DISCLOSED WITHOUT EXPRESSING WRITTEN PERMISSION.

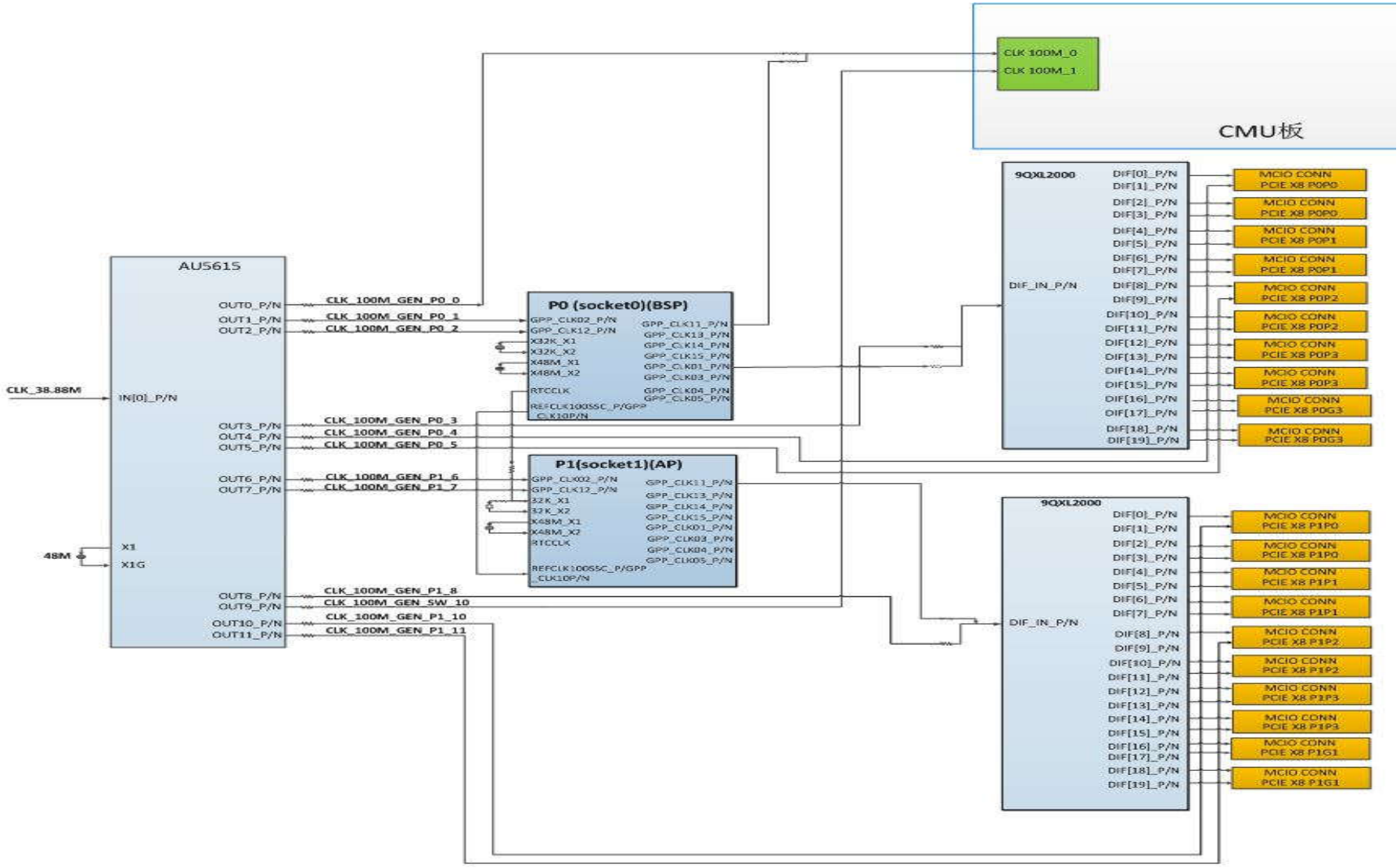

CNIT TECHNOLOGIES CO.,LTD.				
BOARD NAME MB-CADT24D_VERA			DRAWINGNO CNIT0302K1XKDL	
DESIGNED	yujianjiang00259	DATE <DATE_DN>	SHEET 5 OF 200	REV
REVIEWED	<REVIEWED>	DATE <DATE_RW>	Thu Sep 11 13:50:31 2025	

THIS DOCUMENT AND THE TECHNICAL DATA DISCLOSED ARE PROPRIETARY TO CNIT TECHNOLOGIES CO., LTD. AND SHALL NOT BE DUPLICATED USED RELEASED OR DISCLOSED WITHOUT EXPRESSING WRITTEN PERMISSION.

MODULE=---
FUNCTION=---

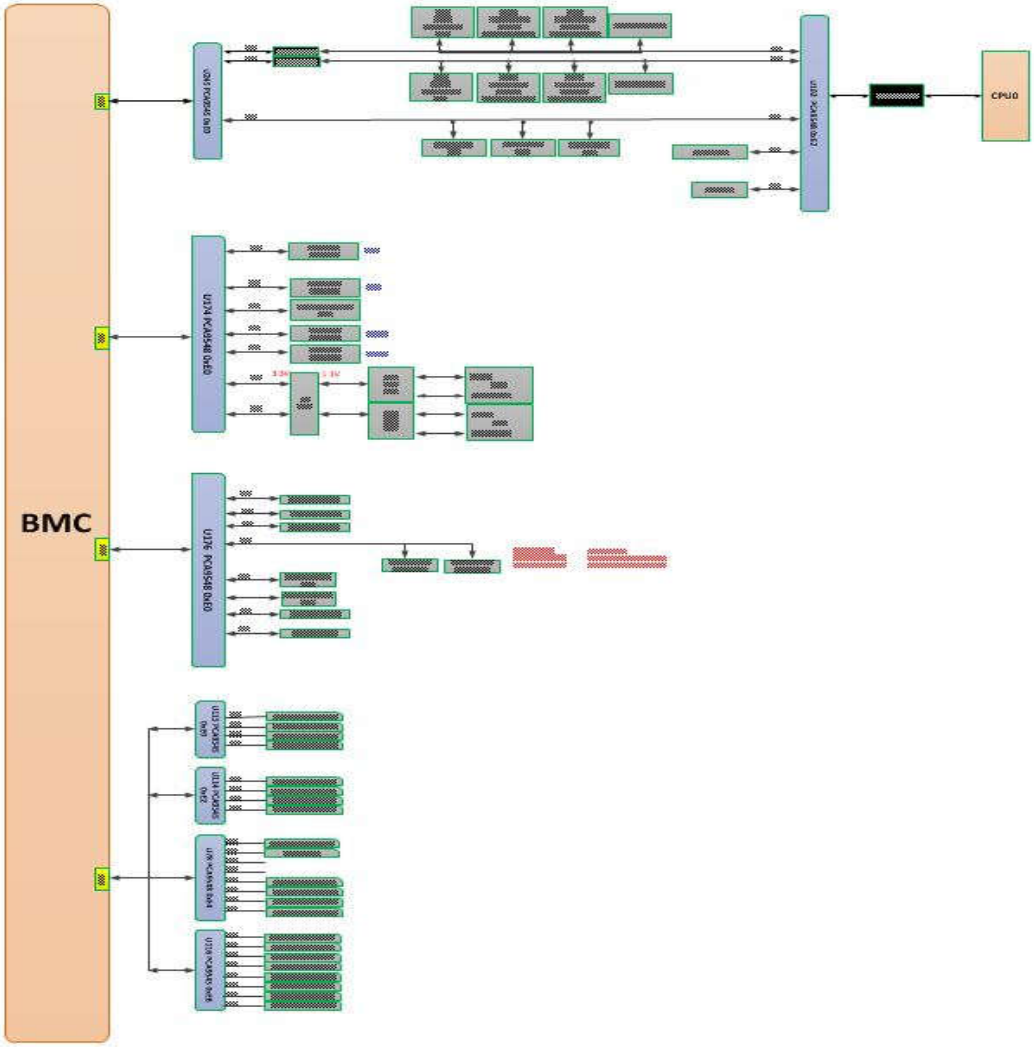

MODULE=---

FUNCTION=---

CNIT TECHNOLOGIES CO.,LTD.				
BOARD NAME MB-CADT24D_VERA			DRAWINGNO CNIT0302K1XKDL	
DESIGNED	yujianjiang00259	DATE <DATE_DN>	SHEET 6 OF 200	REV
REVIEWED	<REVIEWED>	DATE <DATE_RW>	Thu Sep 11 13:58:42 2025	

THIS DOCUMENT AND THE TECHNICAL DATA DISCLOSED ARE PROPRIETARY TO CNIT TECHNOLOGIES CO., LTD. AND SHALL NOT BE DUPLICATED USED RELEASED OR DISCLOSED WITHOUT EXPRESSING WRITTEN PERMISSION.

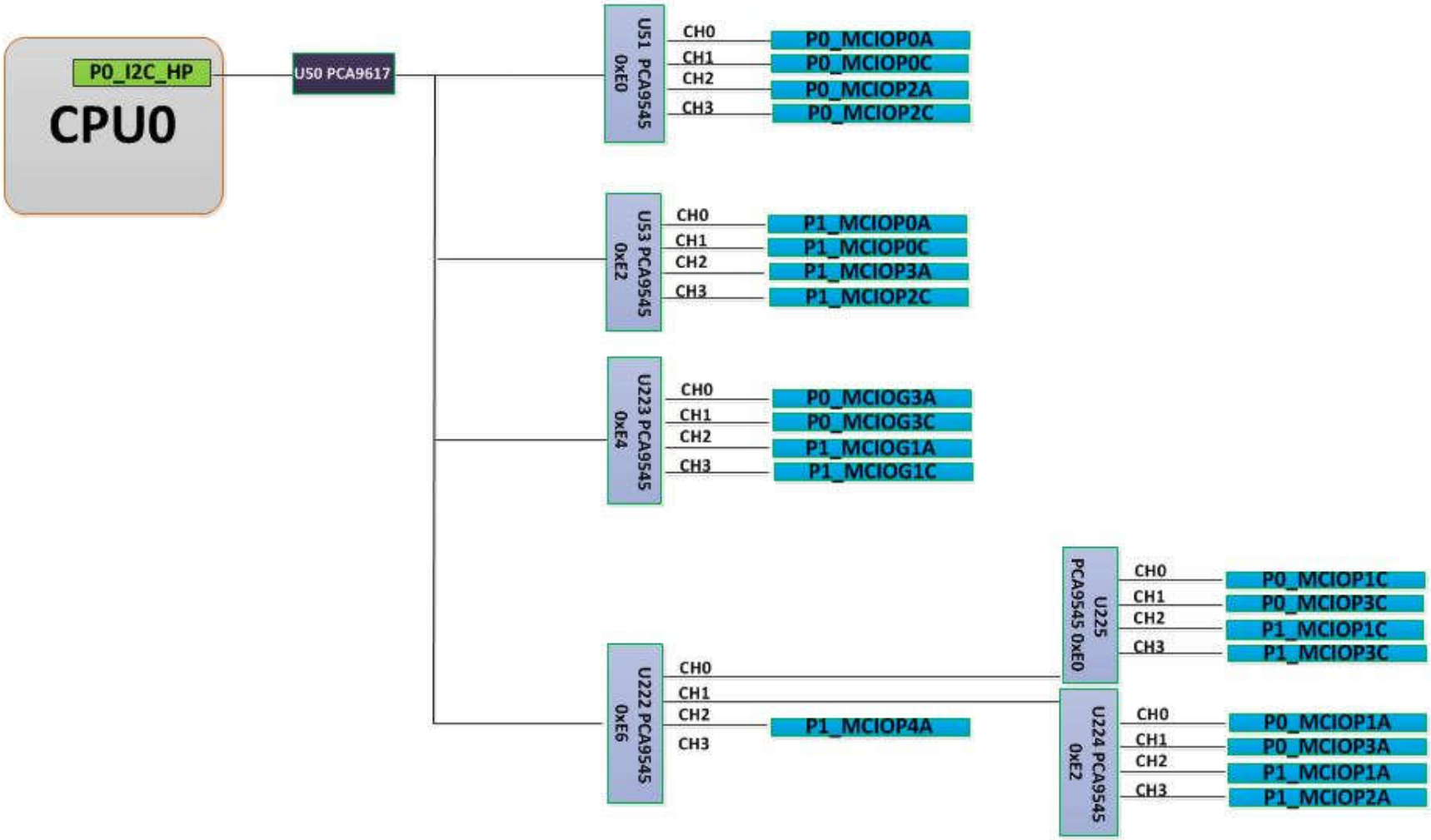

MODULE=---
FUNCTION=---

CNIT TECHNOLOGIES CO.,LTD.				
BOARD NAME MB-CADT24D_VERA			DRAWINGNO CNIT0302K1XKDL	
DESIGNED	yujianjiang00259	DATE <DATE_DN>	SHEET 7 OF 200	REV
REVIEWED	<REVIEWED>	DATE <DATE_RW>	Thu Sep 11 13:58:43 2025	

THIS DOCUMENT AND THE TECHNICAL DATA DISCLOSED ARE PROPRIETARY TO CNIT TECHNOLOGIES CO., LTD. AND SHALL NOT BE DUPLICATED USED RELEASED OR DISCLOSED WITHOUT EXPRESSING WRITTEN PERMISSION.

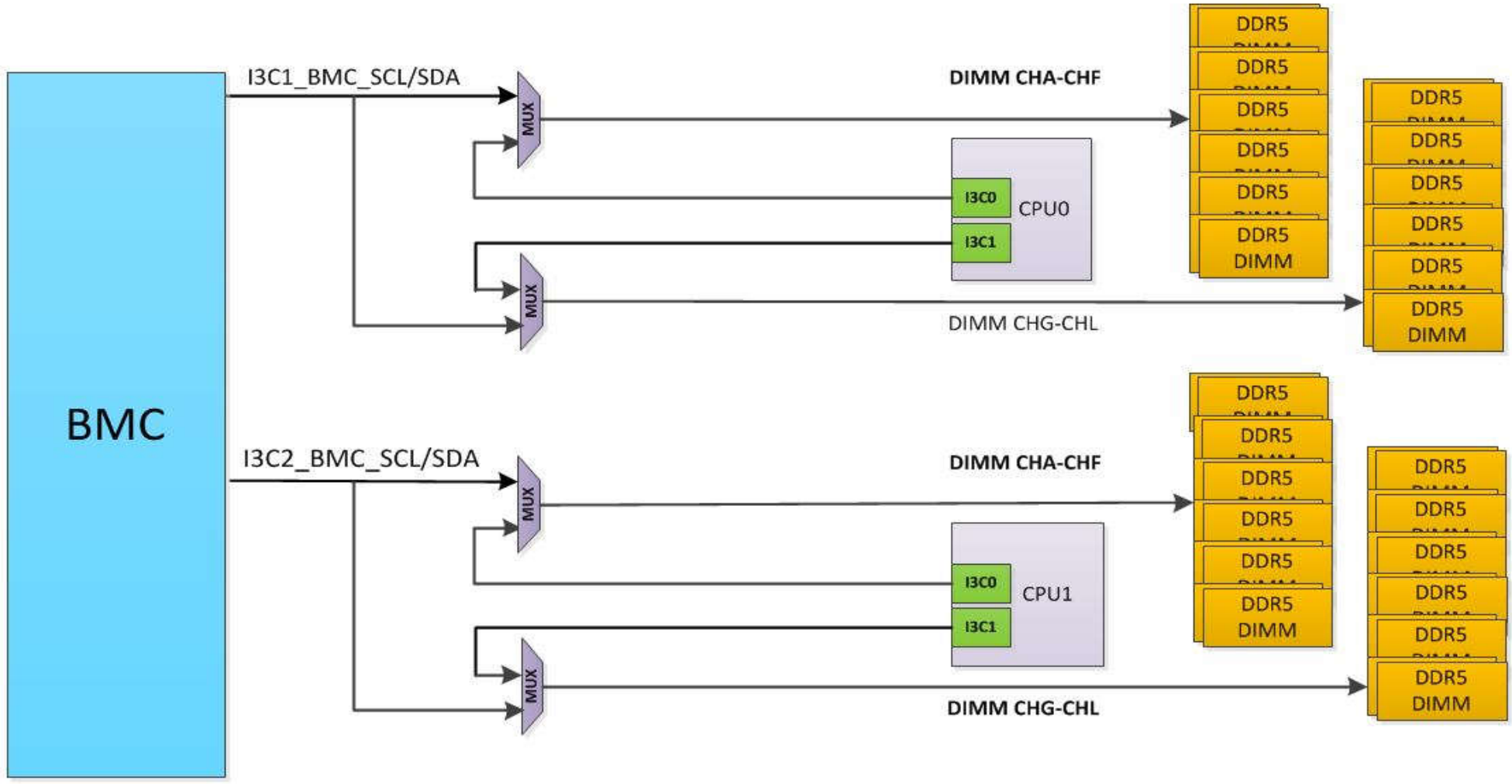

CNIT TECHNOLOGIES CO.,LTD.				
BOARD NAME MB-CADT24D_VERA			DRAWINGNO CNIT0302K1XKDL	
DESIGNED	yujianjiang00259	DATE <DATE_DN>	SHEET 8 OF 200	REV
REVIEWED	<REVIEWED>	DATE <DATE_RW>	Fri Aug 01 17:32:49 2025	

THIS DOCUMENT AND THE TECHNICAL DATA DISCLOSED ARE PROPRIETARY TO CNIT TECHNOLOGIES CO., LTD. AND SHALL NOT BE DUPLICATED USED RELEASED OR DISCLOSED WITHOUT EXPRESSING WRITTEN PERMISSION.

MODULE=---
FUNCTION=---

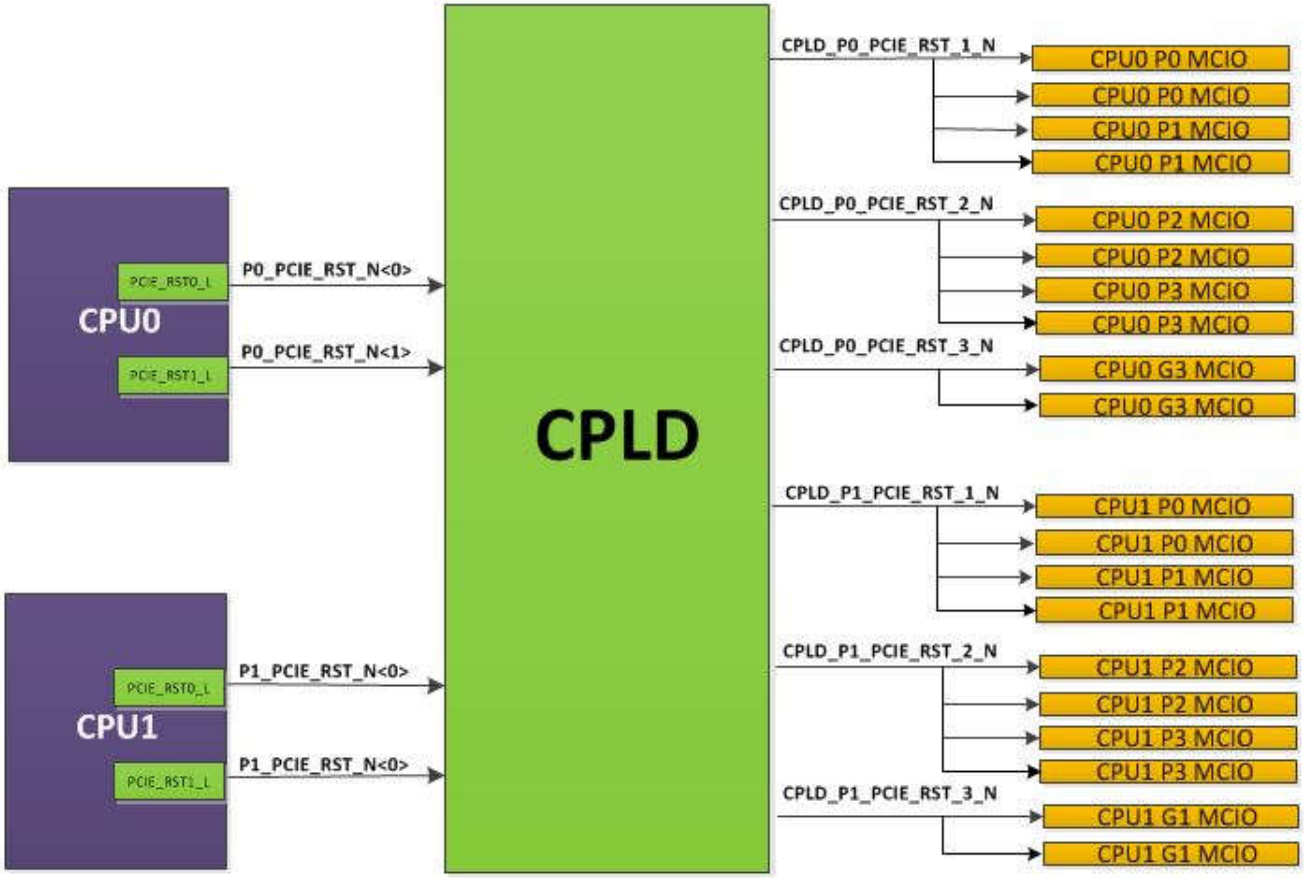

MODULE=---
FUNCTION=---

CNIT TECHNOLOGIES CO.,LTD.				
BOARD NAME MB-CADT24D_VERA			DRAWINGNO CNIT0302K1XKDL	
DESIGNED	yujianjiang00259	DATE <DATE_DN>	SHEET 9 OF 200	REV
REVIEWED	<REVIEWED>	DATE <DATE_RW>	Fri Aug 01 17:53:58 2025	

THIS DOCUMENT AND THE TECHNICAL DATA DISCLOSED ARE PROPRIETARY TO CNIT TECHNOLOGIES CO., LTD. AND SHALL NOT BE DUPLICATED USED RELEASED OR DISCLOSED WITHOUT EXPRESSING WRITTEN PERMISSION.

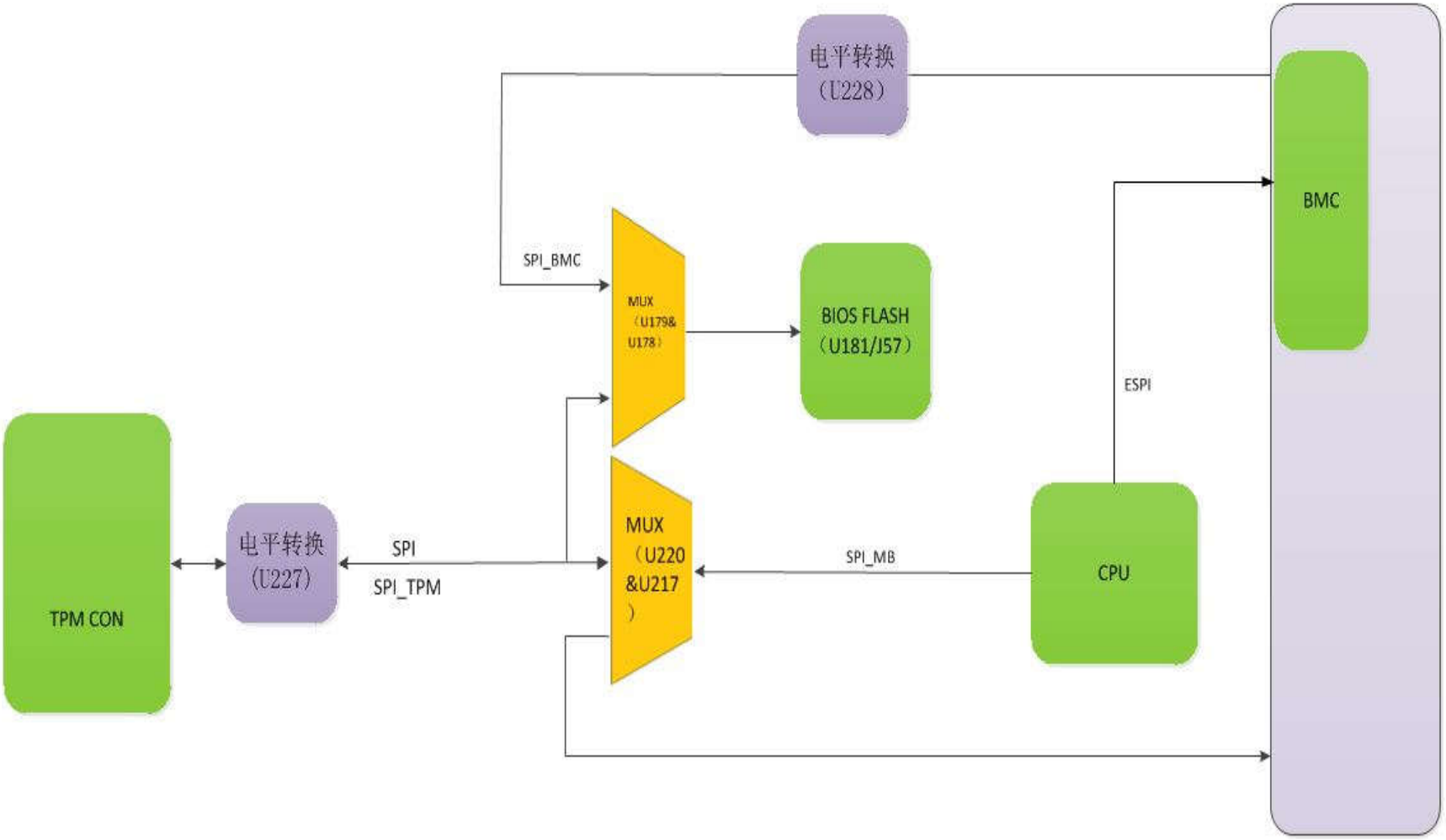

MODULE=---
FUNCTION=---

CNIT TECHNOLOGIES CO.,LTD.				
BOARD NAME MB-CADT24D_VERA			DRAWINGNO CNIT0302K1XKDL	
DESIGNED	yujianjiang00259	DATE <DATE_DN>	SHEET 10 OF 200	REV
REVIEWED	<REVIEWED>	DATE <DATE_RW>	Thu Sep 11 13:58:43 2025	

THIS DOCUMENT AND THE TECHNICAL DATA DISCLOSED ARE PROPRIETARY TO CNIT TECHNOLOGIES CO., LTD. AND SHALL NOT BE DUPLICATED USED RELEASED OR DISCLOSED WITHOUT EXPRESSING WRITTEN PERMISSION.

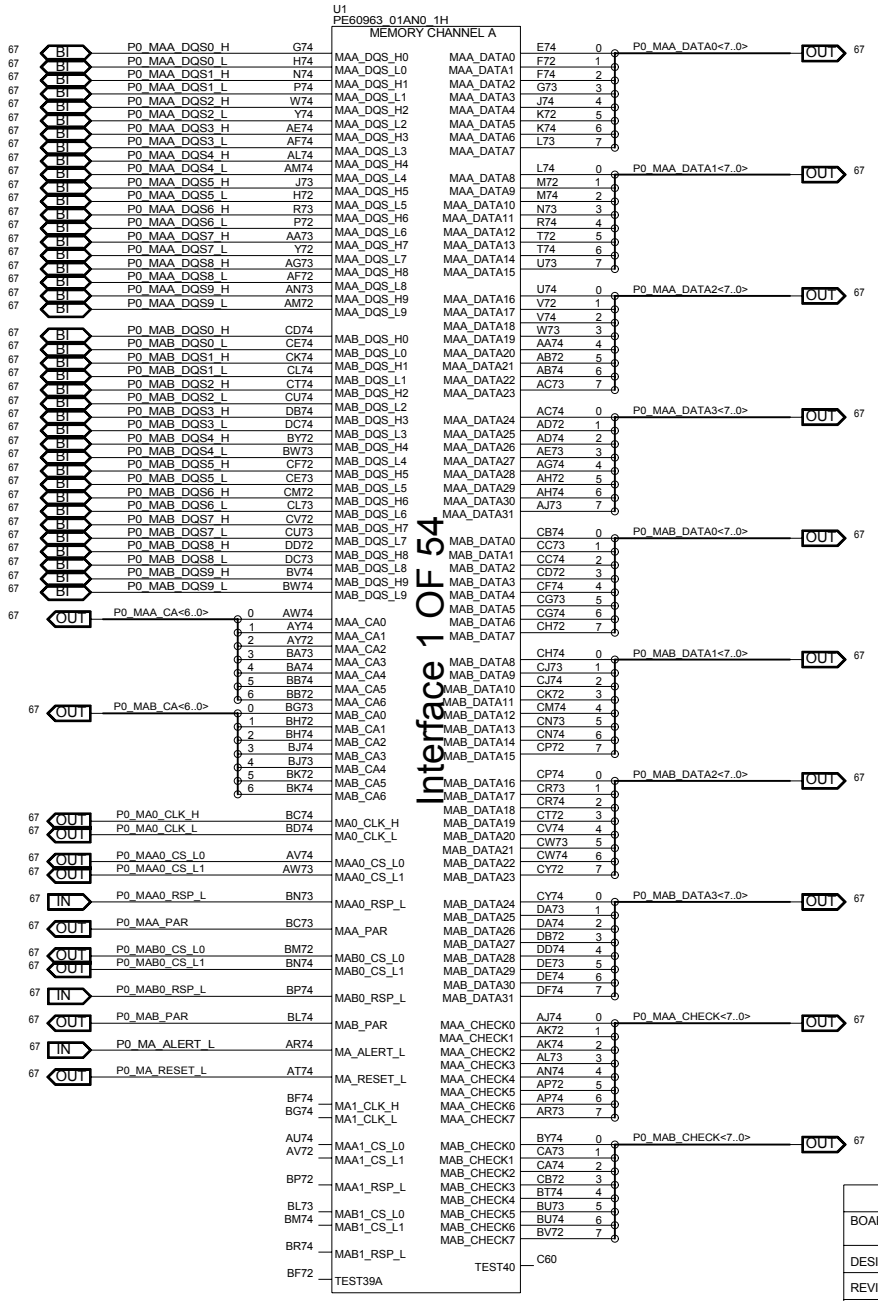

MODULE=---

FUNCTION=---

CNIT TECHNOLOGIES CO.,LTD.				
BOARD NAME MB-CADT24D_VERA			DRAWINGNO CNIT0302K1XKDL	
DESIGNED	yujianjiang00259	DATE <DATE_DN>	SHEET 11 OF 200	REV
REVIEWED	<REVIEWED>	DATE <DATE_RW>	Fri Aug 29 11:20:35 2025	

THIS DOCUMENT AND THE TECHNICAL DATA DISCLOSED ARE PROPRIETARY TO CNIT TECHNOLOGIES CO., LTD. AND SHALL NOT BE DUPLICATED USED RELEASED OR DISCLOSED WITHOUT EXPRESSING WRITTEN PERMISSION.

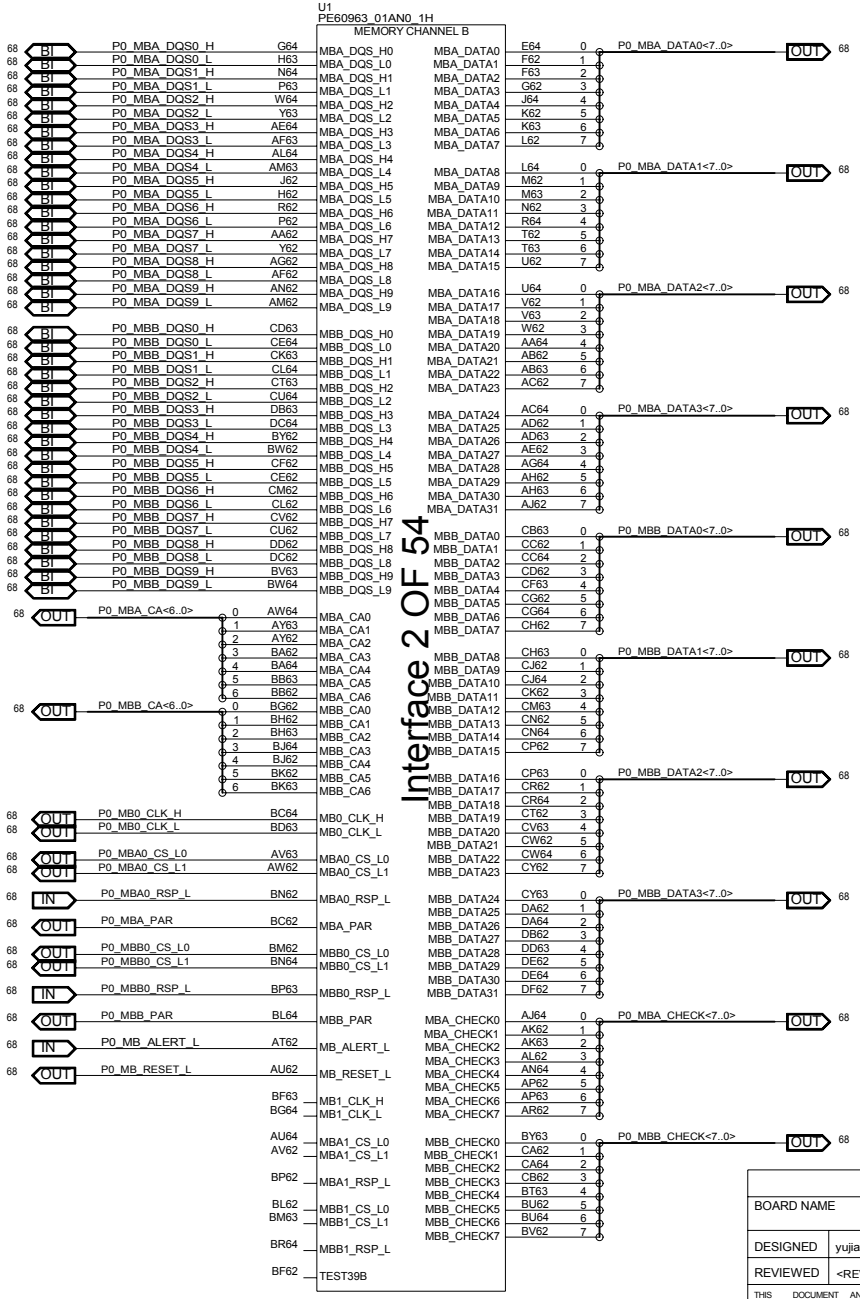

MODULE=---

FUNCTION=---

CNIT TECHNOLOGIES CO.,LTD.				
BOARD NAME MB-CADT24D_VERA			DRAWINGNO CNIT0302K1XKDL	
DESIGNED	yujianjiang00259	DATE <DATE_DN>	SHEET 12 OF 200	REV
REVIEWED	<REVIEWED>	DATE <DATE_RW>	Fri Aug 29 11:20:36 2025	

THIS DOCUMENT AND THE TECHNICAL DATA DISCLOSED ARE PROPRIETARY TO CNIT TECHNOLOGIES CO., LTD. AND SHALL NOT BE DUPLICATED USED RELEASED OR DISCLOSED WITHOUT EXPRESSING WRITTEN PERMISSION.

MODULE=---

FUNCTION=---

CNIT TECHNOLOGIES CO.,LTD.				
BOARD NAME MB-CADT24D_VERA			DRAWINGNO CNIT0302K1XKDL	
DESIGNED	yujianjiang00259	DATE <DATE_DN>	SHEET 13 OF 200	REV
REVIEWED	<REVIEWED>	DATE <DATE_RW>	Fri Aug 29 11:20:36 2025	

THIS DOCUMENT AND THE TECHNICAL DATA DISCLOSED ARE PROPRIETARY TO CNIT TECHNOLOGIES CO., LTD. AND SHALL NOT BE DUPLICATED USED RELEASED OR DISCLOSED WITHOUT EXPRESSING WRITTEN PERMISSION.

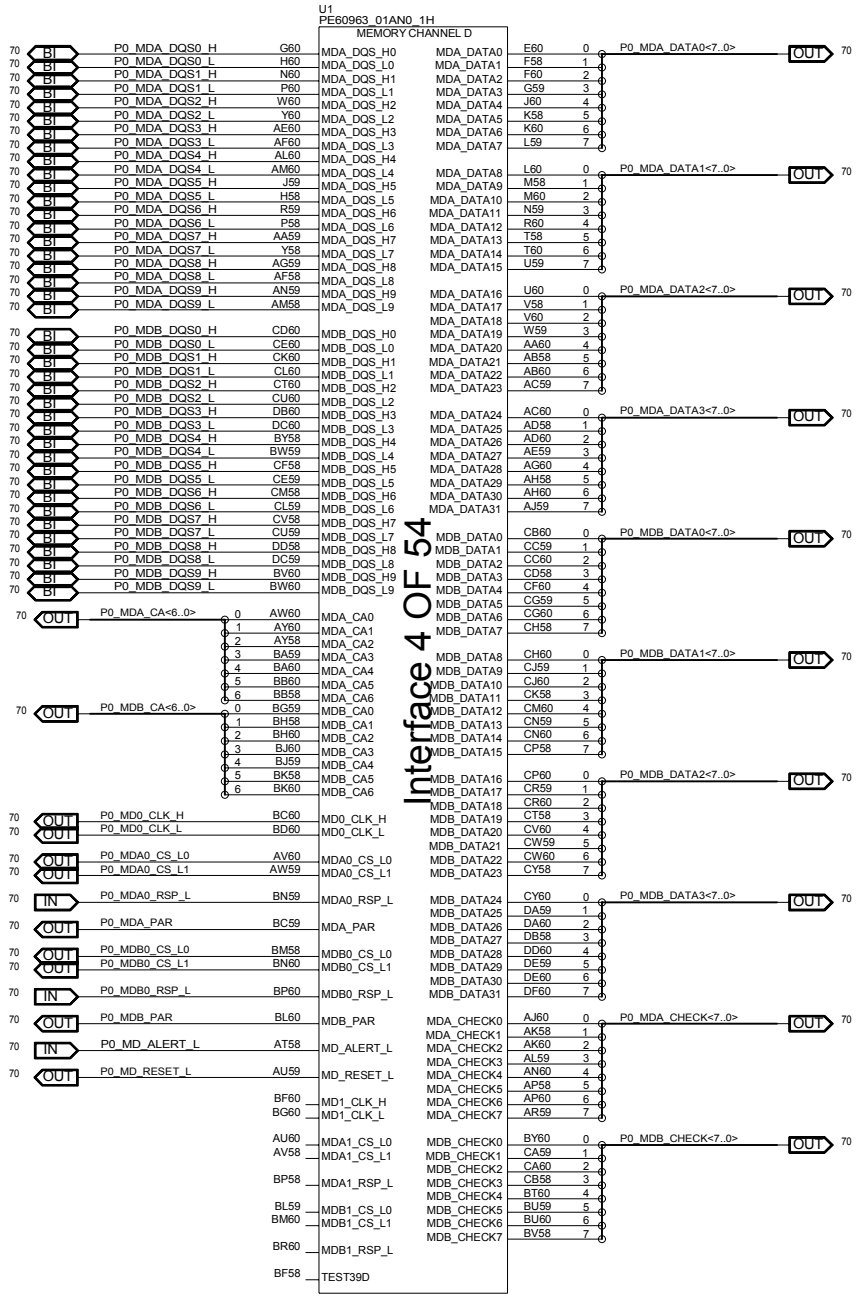

MODULE=---

FUNCTION=---

CNIT TECHNOLOGIES CO.,LTD.				
BOARD NAME MB-CADT24D_VERA			DRAWINGNO CNIT0302K1XKDL	
DESIGNED	yujianjiang00259	DATE <DATE_DN>	SHEET 14 OF 200	REV
REVIEWED	<REVIEWED>	DATE <DATE_RW>	Fri Aug 29 11:20:37 2025	

THIS DOCUMENT AND THE TECHNICAL DATA DISCLOSED ARE PROPRIETARY TO CNIT TECHNOLOGIES CO., LTD. AND SHALL NOT BE DUPLICATED USED RELEASED OR DISCLOSED WITHOUT EXPRESSING WRITTEN PERMISSION.

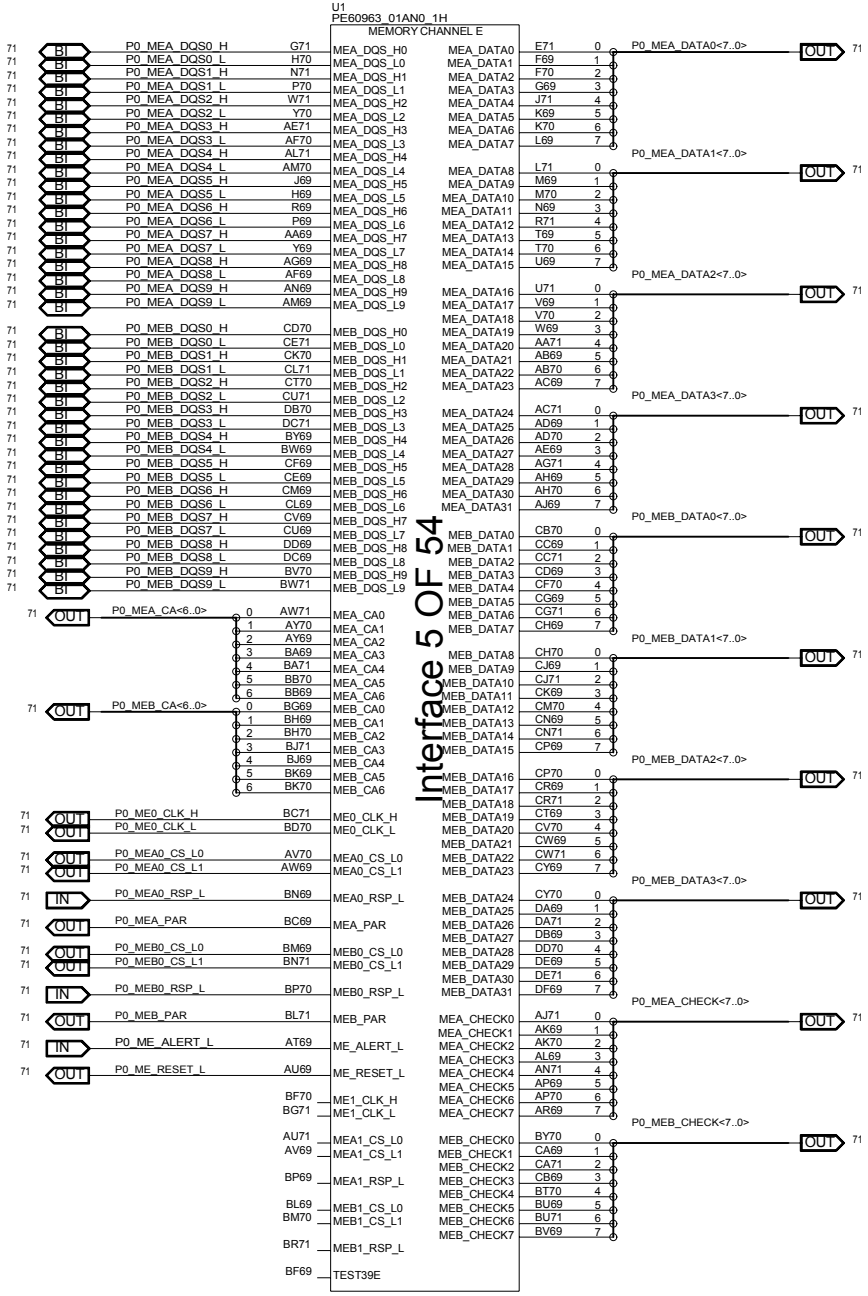

MODULE=---

FUNCTION=---

CNIT TECHNOLOGIES CO.,LTD.				
BOARD NAME MB-CADT24D_VERA			DRAWINGNO CNIT0302K1XKDL	
DESIGNED	yujianjiang00259	DATE <DATE_DN>	SHEET 15 OF 200	REV
REVIEWED	<REVIEWED>	DATE <DATE_RW>	Fri Aug 29 11:20:37 2025	

THIS DOCUMENT AND THE TECHNICAL DATA DISCLOSED ARE PROPRIETARY TO CNIT TECHNOLOGIES CO., LTD. AND SHALL NOT BE DUPLICATED USED RELEASED OR DISCLOSED WITHOUT EXPRESSING WRITTEN PERMISSION.

MODULE=---

FUNCTION=---

CNIT TECHNOLOGIES CO.,LTD.				
BOARD NAME MB-CADT24D_VERA			DRAWINGNO CNIT0302K1XKDL	
DESIGNED	yujianjiang00259	DATE <DATE_DN>	SHEET 16 OF 200	REV
REVIEWED	<REVIEWED>	DATE <DATE_RW>	Fri Aug 29 11:20:37 2025	

THIS DOCUMENT AND THE TECHNICAL DATA DISCLOSED ARE PROPRIETARY TO CNIT TECHNOLOGIES CO., LTD. AND SHALL NOT BE DUPLICATED USED RELEASED OR DISCLOSED WITHOUT EXPRESSING WRITTEN PERMISSION.

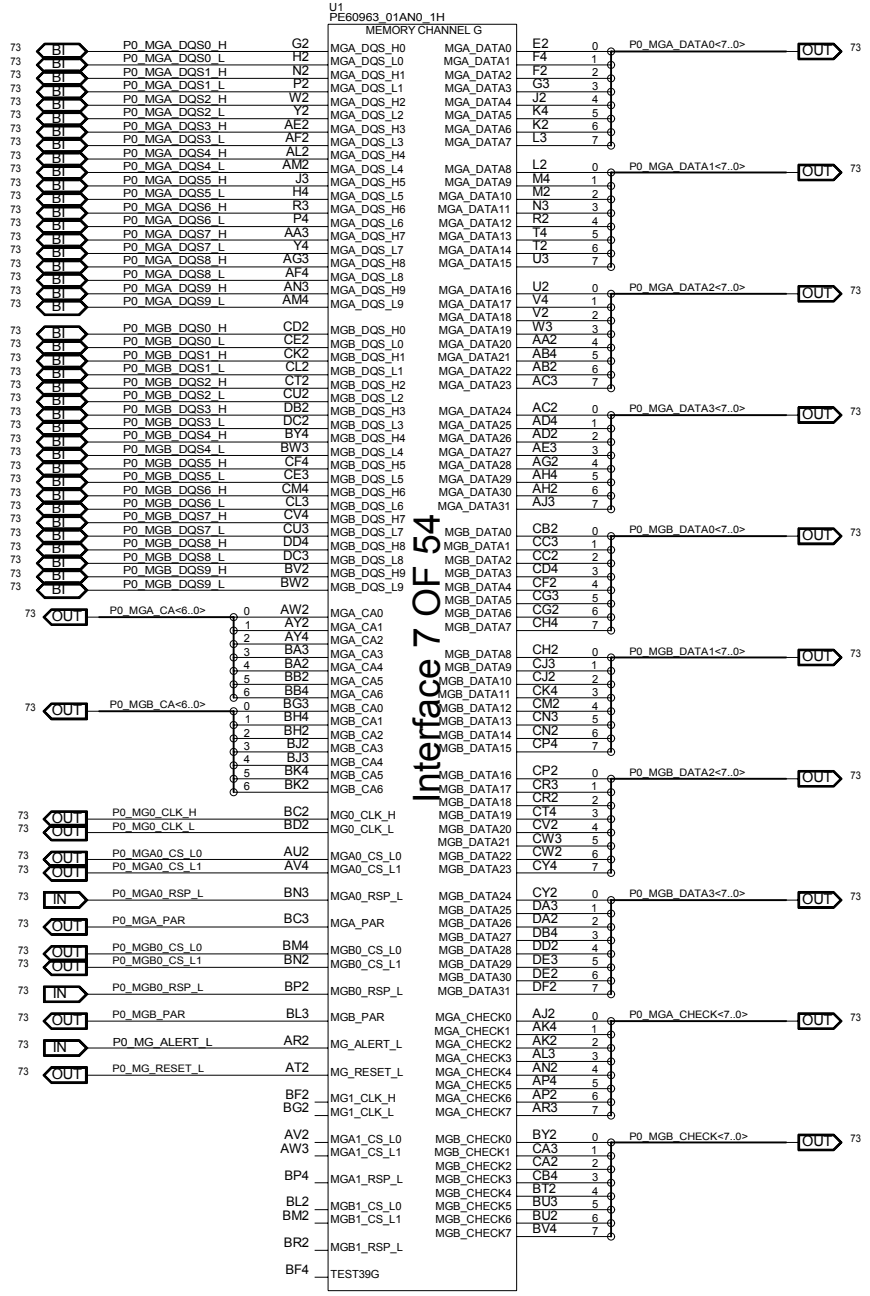

MODULE=---

FUNCTION=---

CNIT TECHNOLOGIES CO.,LTD.				
BOARD NAME MB-CADT24D_VERA			DRAWINGNO CNIT0302K1XKDL	
DESIGNED	yujianjiang00259	DATE <DATE_DN>	SHEET 17 OF 200	REV
REVIEWED	<REVIEWED>	DATE <DATE_RW>	Fri Aug 29 11:20:38 2025	

THIS DOCUMENT AND THE TECHNICAL DATA DISCLOSED ARE PROPRIETARY TO CNIT TECHNOLOGIES CO., LTD. AND SHALL NOT BE DUPLICATED USED RELEASED OR DISCLOSED WITHOUT EXPRESSING WRITTEN PERMISSION.

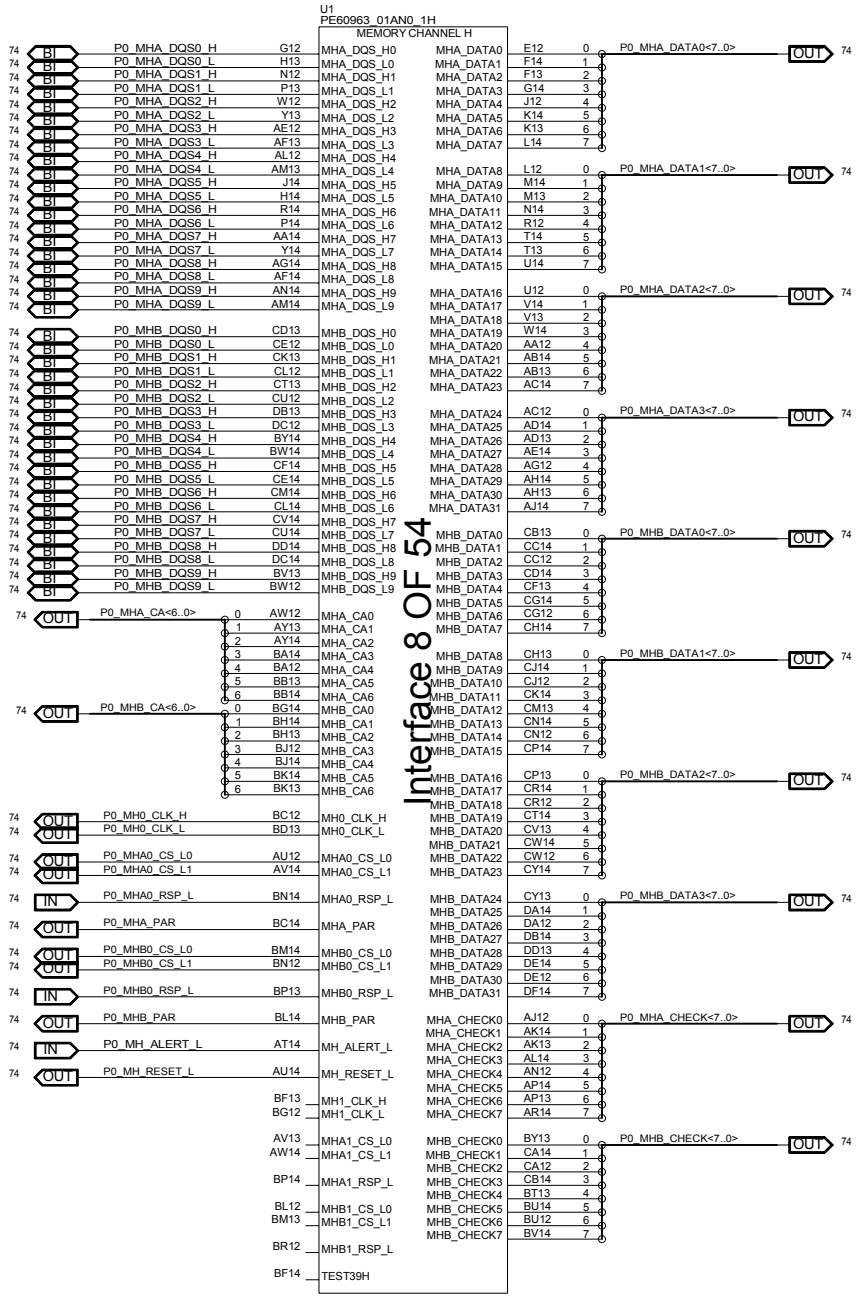

MODULE=---

FUNCTION=---

CNIT TECHNOLOGIES CO.,LTD.				
BOARD NAME MB-CADT24D_VERA			DRAWINGNO CNIT0302K1XKDL	
DESIGNED	yujianjiang00259	DATE <DATE_DN>	SHEET 18 OF 200	REV
REVIEWED	<REVIEWED>	DATE <DATE_RW>	Fri Aug 29 11:20:39 2025	

THIS DOCUMENT AND THE TECHNICAL DATA DISCLOSED ARE PROPRIETARY TO CNIT TECHNOLOGIES CO., LTD. AND SHALL NOT BE DUPLICATED USED RELEASED OR DISCLOSED WITHOUT EXPRESSING WRITTEN PERMISSION.

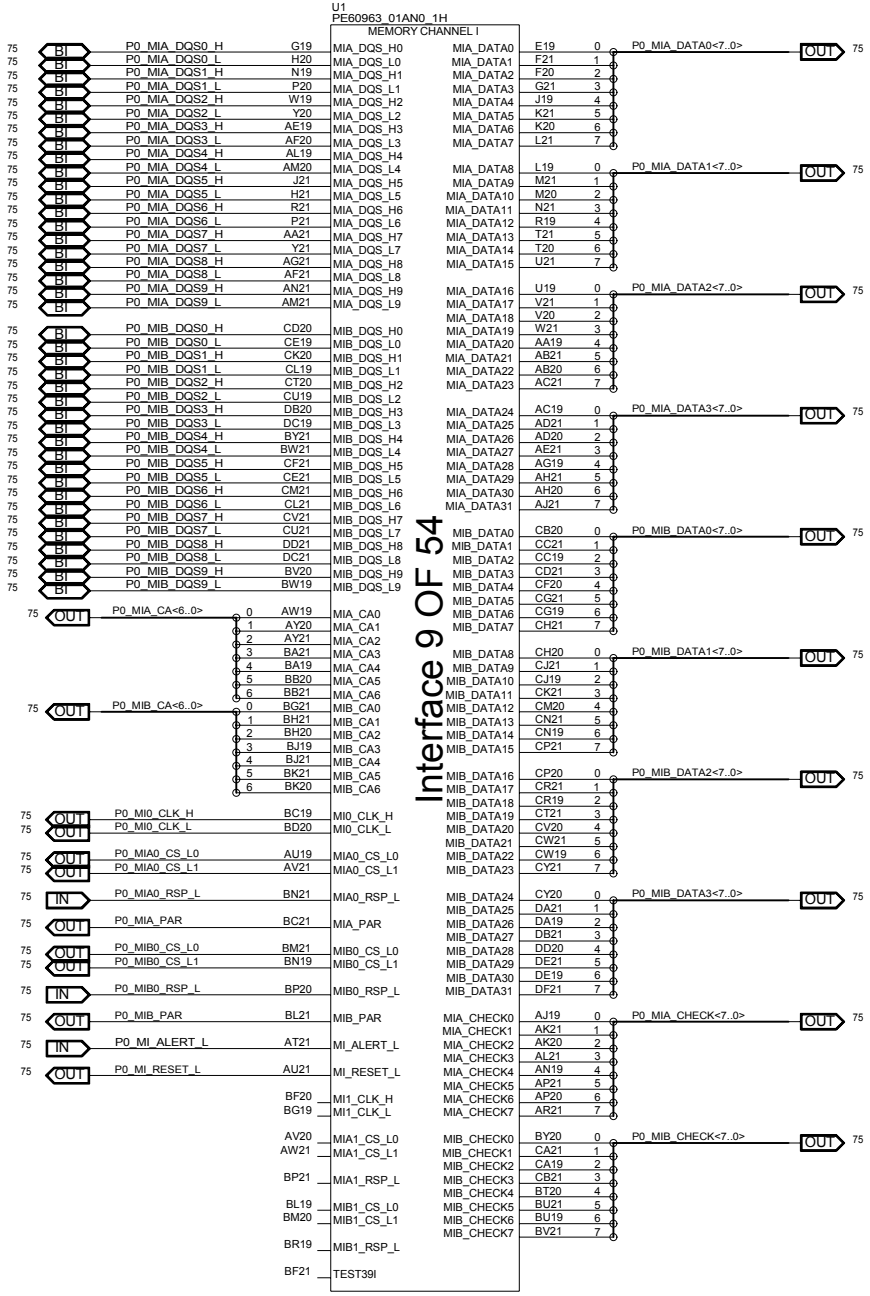

MODULE=---

FUNCTION=---

CNIT TECHNOLOGIES CO.,LTD.				
BOARD NAME MB-CADT24D_VERA			DRAWINGNO CNIT0302K1XKDL	
DESIGNED	yujianjiang00259	DATE <DATE_DN>	SHEET 19 OF 200	REV
REVIEWED	<REVIEWED>	DATE <DATE_RW>	Fri Aug 29 11:20:39 2025	

THIS DOCUMENT AND THE TECHNICAL DATA DISCLOSED ARE PROPRIETARY TO CNIT TECHNOLOGIES CO., LTD. AND SHALL NOT BE DUPLICATED USED RELEASED OR DISCLOSED WITHOUT EXPRESSING WRITTEN PERMISSION.

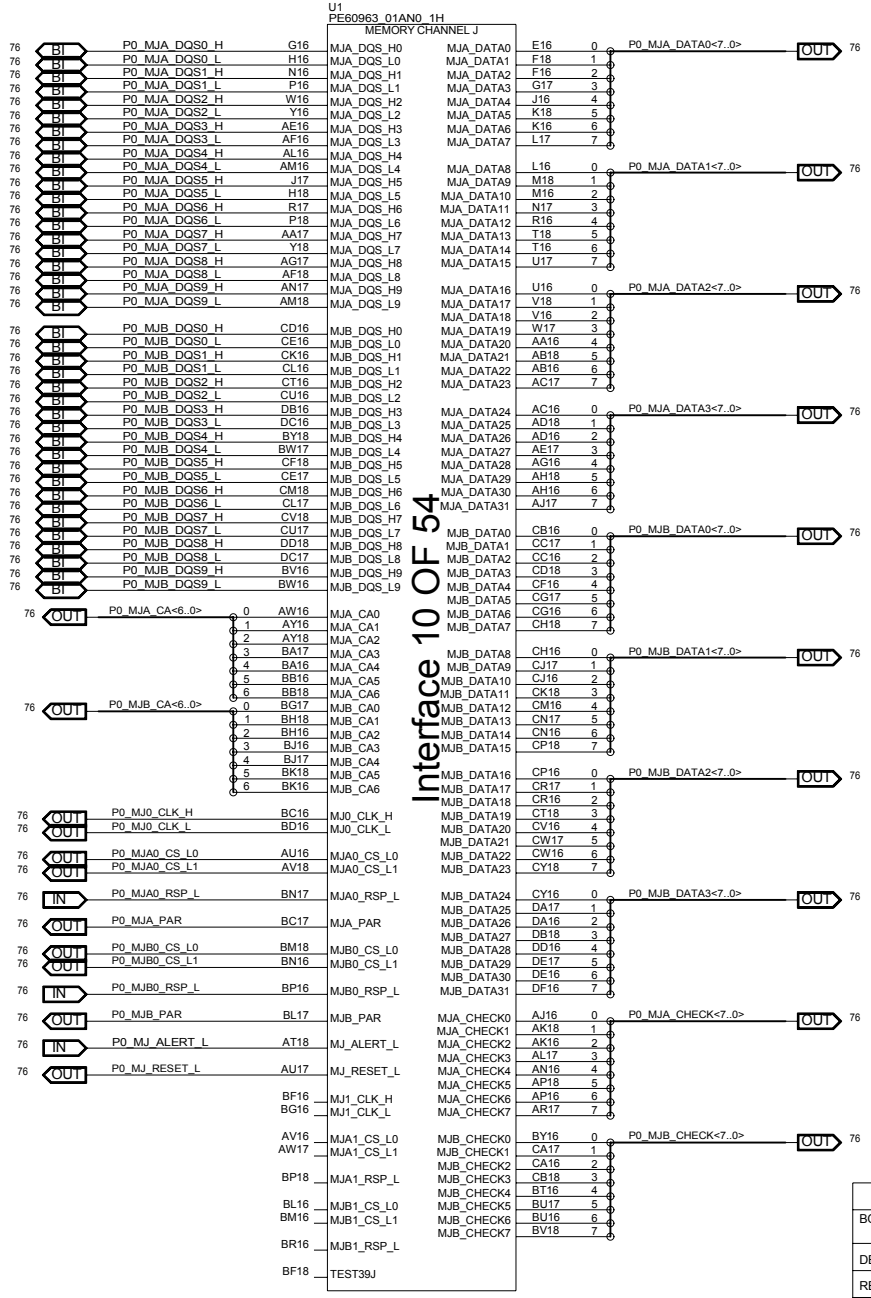

MODULE=---

FUNCTION=---

CNIT TECHNOLOGIES CO.,LTD.				
BOARD NAME MB-CADT24D_VERA			DRAWINGNO CNIT0302K1XKDL	
DESIGNED	yujianjiang00259	DATE <DATE_DN>	SHEET 20 OF 200	REV
REVIEWED	<REVIEWED>	DATE <DATE_RW>	Fri Aug 29 11:20:40 2025	

THIS DOCUMENT AND THE TECHNICAL DATA DISCLOSED ARE PROPRIETARY TO CNIT TECHNOLOGIES CO., LTD. AND SHALL NOT BE DUPLICATED USED RELEASED OR DISCLOSED WITHOUT EXPRESSING WRITTEN PERMISSION.

MODULE=---

FUNCTION=---

CNIT TECHNOLOGIES CO.,LTD.				
BOARD NAME MB-CADT24D_VERA			DRAWINGNO CNIT0302K1XKDL	
DESIGNED	yujianjiang00259	DATE <DATE_DN>	SHEET 21 OF 200	REV
REVIEWED	<REVIEWED>	DATE <DATE_RW>	Fri Aug 29 11:20:40 2025	

THIS DOCUMENT AND THE TECHNICAL DATA DISCLOSED ARE PROPRIETARY TO CNIT TECHNOLOGIES CO., LTD. AND SHALL NOT BE DUPLICATED USED RELEASED OR DISCLOSED WITHOUT EXPRESSING WRITTEN PERMISSION.

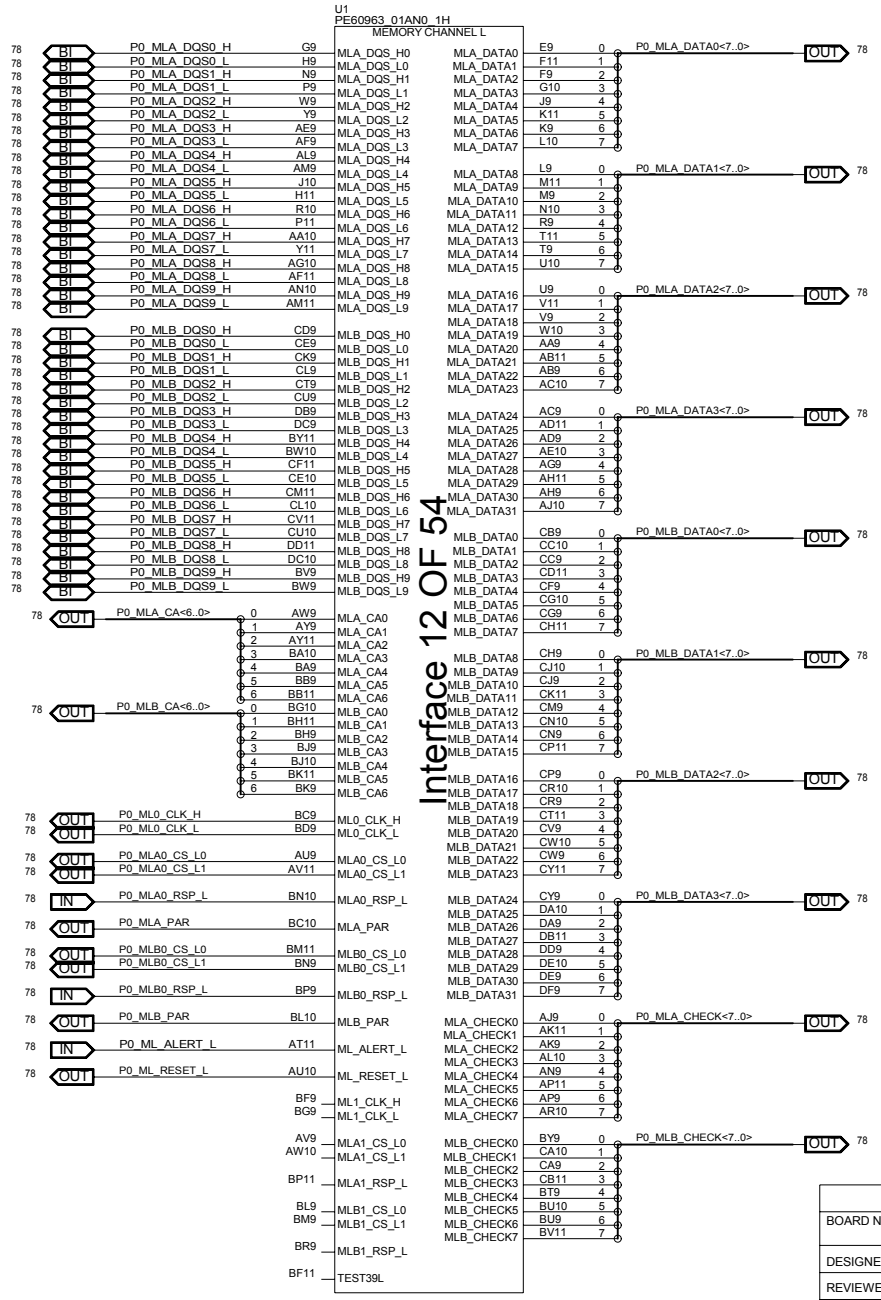

MODULE=---

FUNCTION=---

CNIT TECHNOLOGIES CO.,LTD.				
BOARD NAME MB-CADT24D_VERA			DRAWINGNO CNIT0302K1XKDL	
DESIGNED	yujianjiang00259	DATE <DATE_DN>	SHEET 22 OF 200	REV
REVIEWED	<REVIEWED>	DATE <DATE_RW>	Fri Aug 29 11:20:41 2025	

THIS DOCUMENT AND THE TECHNICAL DATA DISCLOSED ARE PROPRIETARY TO CNIT TECHNOLOGIES CO., LTD. AND SHALL NOT BE DUPLICATED USED RELEASED OR DISCLOSED WITHOUT EXPRESSING WRITTEN PERMISSION.

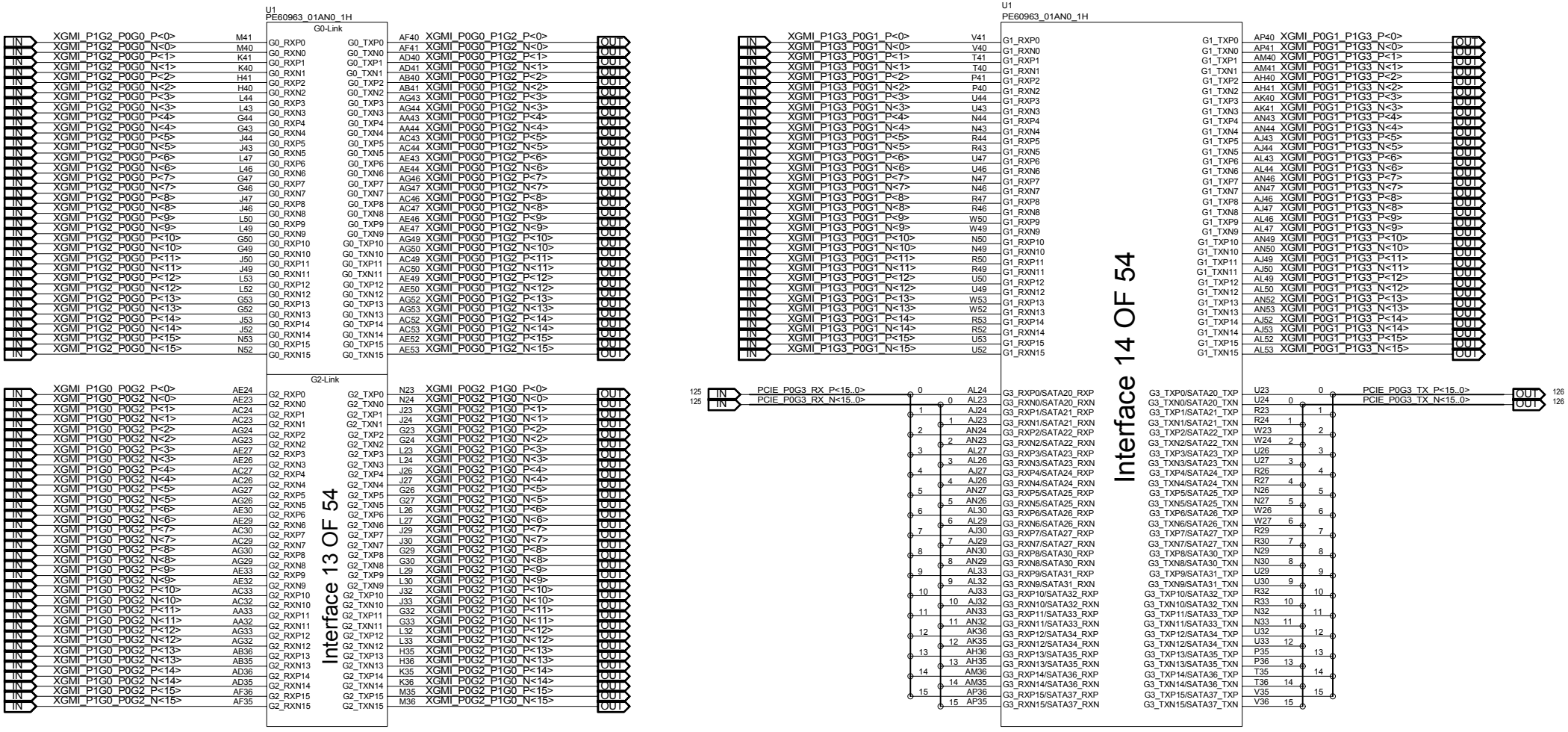

MODULE=---

FUNCTION=---

CNIT TECHNOLOGIES CO.,LTD.				
BOARD NAME MB-CADT24D_VERA			DRAWINGNO CNIT0302K1XKDL	
DESIGNED	yujianjiang00259	DATE <DATE_DN>	SHEET 23 OF 200	REV
REVIEWED	<REVIEWED>	DATE <DATE_RW>	Thu Sep 04 19:50:01 2025	

THIS DOCUMENT AND THE TECHNICAL DATA DISCLOSED ARE PROPRIETARY TO CNIT TECHNOLOGIES CO., LTD. AND SHALL NOT BE DUPLICATED USED RELEASED OR DISCLOSED WITHOUT EXPRESSING WRITTEN PERMISSION.

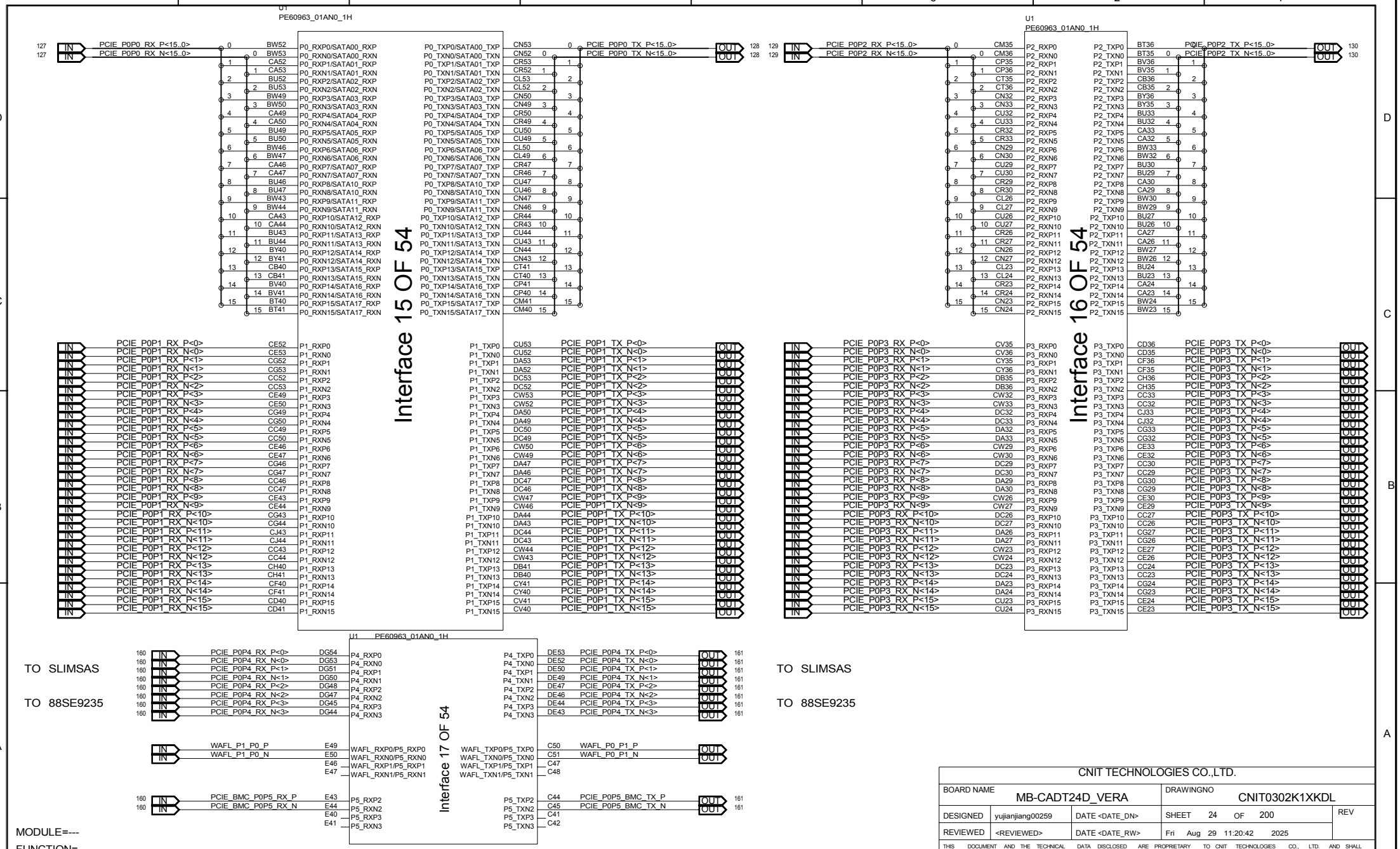

CNIT TECHNOLOGIES CO.,LTD.				
BOARD NAME MB-CADT24D_VERA			DRAWINGNO CNIT0302K1XKDL	
DESIGNED	yujianjiang00259	DATE <DATE_DN>	SHEET 24 OF 200	REV
REVIEWED	<REVIEWED>	DATE <DATE_RW>	Fri Aug 29 11:20:42 2025	

THIS DOCUMENT AND THE TECHNICAL DATA DISCLOSED ARE PROPRIETARY TO CNIT TECHNOLOGIES CO., LTD. AND SHALL NOT BE DUPLICATED USED RELEASED OR DISCLOSED WITHOUT EXPRESSING WRITTEN PERMISSION.

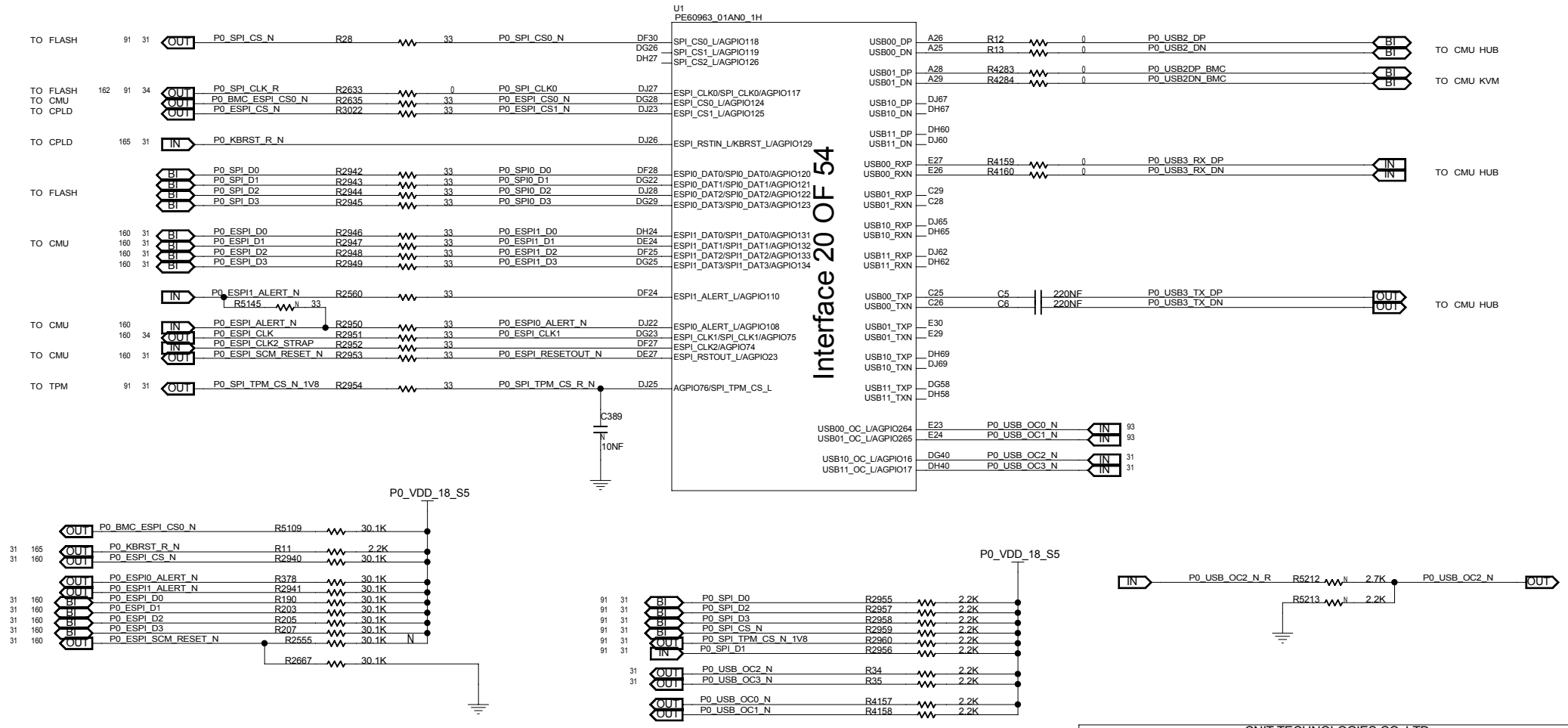

CNIT TECHNOLOGIES CO.,LTD.				
BOARD NAME	MB-CADT24D_VERA		DRAWINGNO	CNIT0302K1XKDL
DESIGNED	yujianjiang00259	DATE <DATE_DN>	SHEET 25 OF 200	REV
REVIEWED	<REVIEWED>	DATE <DATE_RW>	Sat Sep 13 14:13:25 2025	

THIS DOCUMENT AND THE TECHNICAL DATA DISCLOSED ARE PROPRIETARY TO CNIT TECHNOLOGIES CO., LTD. AND SHALL NOT BE DUPLICATED USED RELEASED OR DISCLOSED WITHOUT EXPRESSING WRITTEN PERMISSION.

MODULE=---

FUNCTION=---

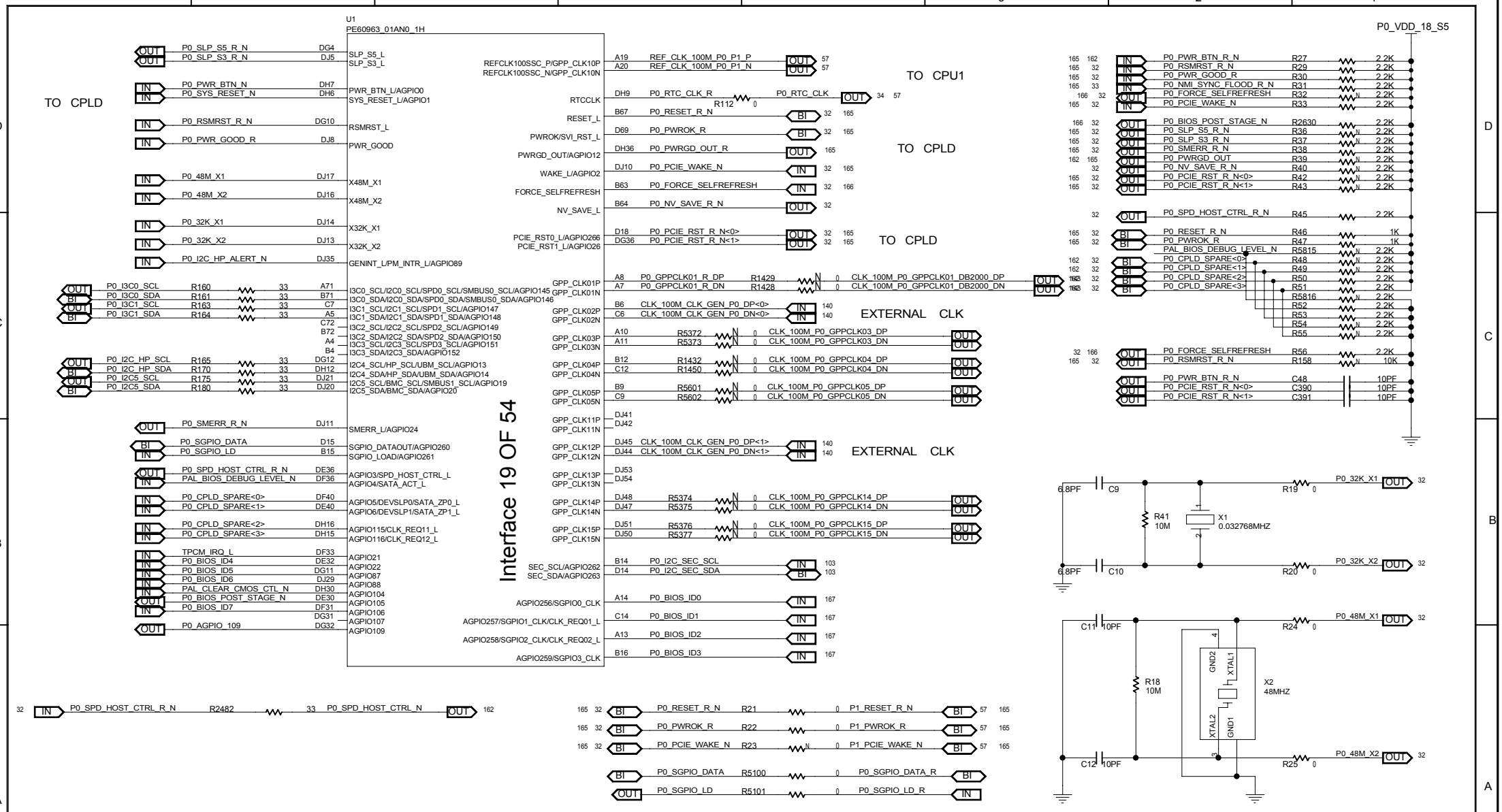

MODULE=---

FUNCTION=---

CNIT TECHNOLOGIES CO.,LTD.				
BOARD NAME	MB-CADT24D_VERA		DRAWINGNO	CNIT0302K1XKDL
DESIGNED	yujianjiang00259	DATE <DATE_DN>	SHEET 26 OF 200	REV
REVIEWED	<REVIEWED>	DATE <DATE_RW>	Sat Sep 13 14:13:29 2025	

THIS DOCUMENT AND THE TECHNICAL DATA DISCLOSED ARE PROPRIETARY TO CNIT TECHNOLOGIES CO., LTD. AND SHALL NOT BE DUPLICATED USED RELEASED OR DISCLOSED WITHOUT EXPRESSING WRITTEN PERMISSION.

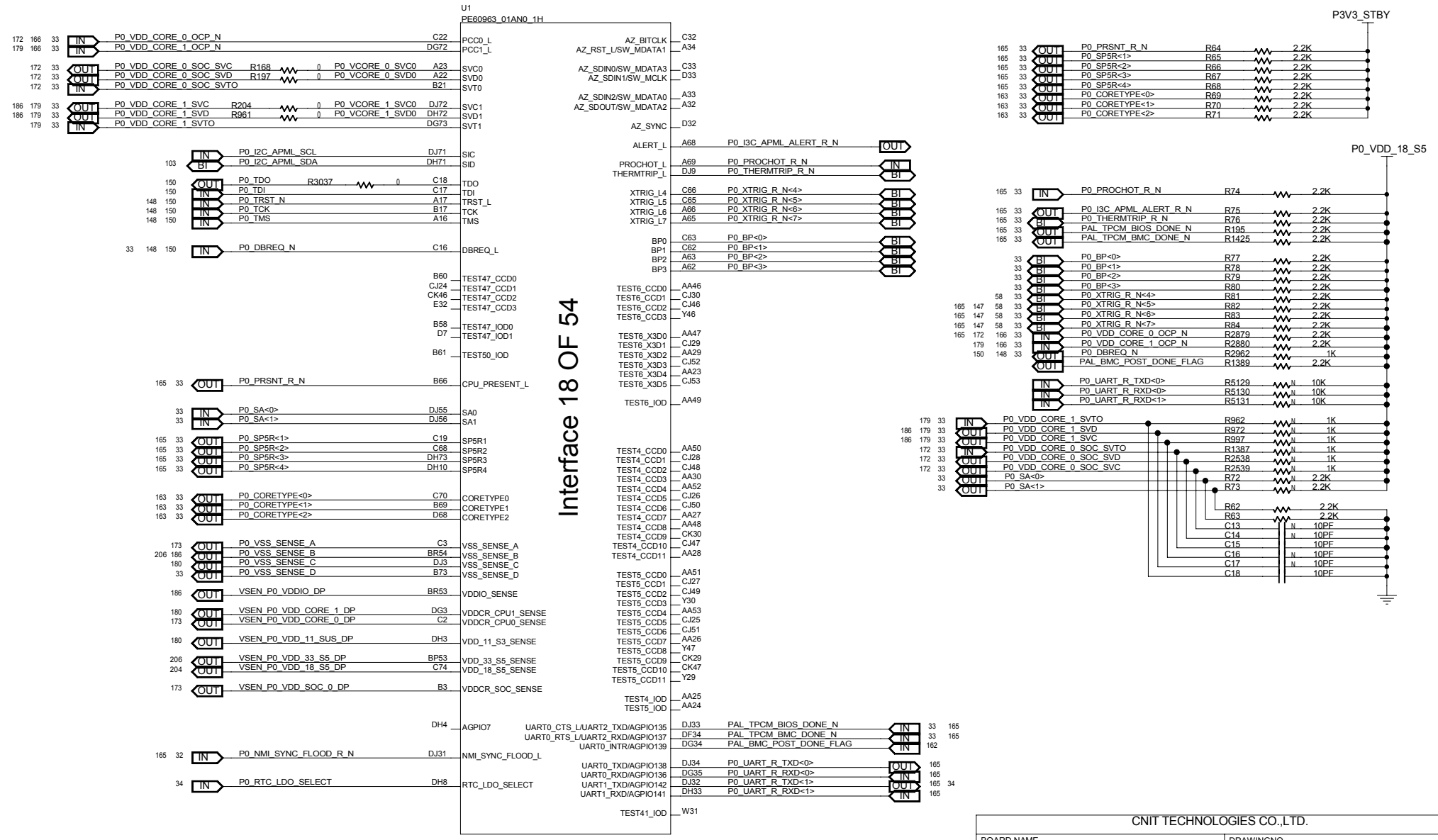
U1
PE60963_01AN0_1H
Interface 18 OF 54
P3V3_STBY
P0_VDD_18_S5
P0_VDD_CORE_0_OCP_N
P0_VDD_CORE_1_OCP_N
P0_VDD_CORE_0_SOC_SVC
P0_VDD_CORE_0_SOC_SVD
P0_VDD_CORE_0_SOC_SVTO
P0_VDD_CORE_1_SVC
P0_VDD_CORE_1_SVD
P0_VDD_CORE_1_SVTO
P0_I2C_APML_SCL
P0_I2C_APML_SDA
P0_TDO
P0_TDI
P0_TRST_N
P0_TCK
P0_TMS
P0_DBREQ_N
P0_PRSNT_R_N
P0_SA<0>
P0_SA<1>
P0_SP5R<1>
P0_SP5R<2>
P0_SP5R<3>
P0_SP5R<4>
P0_CORETYPE<0>
P0_CORETYPE<1>
P0_CORETYPE<2>
P0_VSS_SENSE_A
P0_VSS_SENSE_B
P0_VSS_SENSE_C
P0_VSS_SENSE_D
VSEN_P0_VDDIO_DP
VSEN_P0_VDD_CORE_1_DP
VSEN_P0_VDD_CORE_0_DP
VSEN_P0_VDD_11_SUS_DP
VSEN_P0_VDD_33_S5_DP
VSEN_P0_VDD_18_S5_DP
VSEN_P0_VDD_SOC_0_DP
P0_NMI_SYNC_FLOOD_R_N
P0_RTC_LDO_SELECT
P0_I3C_APML_ALERT_R_N
P0_PROCHOT_R_N
P0_THERMTRIP_R_N
P0_XTRIG_R_N<4>
P0_XTRIG_R_N<5>
P0_XTRIG_R_N<6>
P0_XTRIG_R_N<7>
P0_BP<0>
P0_BP<1>
P0_BP<2>
P0_BP<3>
PAL_TPCM_BIOS_DONE_N
PAL_TPCM_BMC_DONE_N
PAL_BMC_POST_DONE_FLAG
P0_UART_R_TXD<0>
P0_UART_R_RXD<0>
P0_UART_R_RXD<1>
R3037
R204
R961
R168
R197
R64
R65
R66
R67
R68
R69
R70
R71
R74
R75
R76
R195
R1425
R77
R78
R79
R80
R81
R82
R83
R84
R2879
R2880
R2962
R1389
R5129
R5130
R5131
R962
R972
R997
R1387
R2538
R2539
R72
R73
R62
R63
C13
C14
C15
C16
C17
C18
2.2K
1K
10K
10PF
CNIT TECHNOLOGIES CO.,LTD.
BOARD NAME
MB-CADT24D_VERA
DRAWINGNO
CNIT0302K1XKDL
DESIGNED
yujianjiang00259
DATE <DATE_DN>
SHEET 27 OF 200
REV
REVIEWED
<REVIEWED>
DATE <DATE_RW>
Sat Sep 13 14:13:32 2025
THIS DOCUMENT AND THE TECHNICAL DATA DISCLOSED ARE PROPRIETARY TO CNIT TECHNOLOGIES CO., LTD. AND SHALL NOT BE DUPLICATED USED RELEASED OR DISCLOSED WITHOUT EXPRESSING WRITTEN PERMISSION.
MODULE=---
FUNCTION=---

PIN NAME	INTERNAL PU/PD	CPU0(DEFAULT)	CPU1(DEFAULT)	DESCRIPTION
ESPI_CLK0/SPI_CLK0/AGPIO117	PD	0	0	CLKGEN SELECTION 0: EXTERNAL CLKGEN MODE 1: INTERNAL CLKGEN MODE
UART1_TXD/AGPIO142 AGPIO109	PU PU	0 1	0 0	ROMTYPE[1:0] 01: SPI ROM 00: RSVD 1X: ESPI
ESPI_CLK1/SPI_CLK1/AGPIO75	PD	0	0	ALTERNATE IMAGE 0: TOP HALF 64MB ROM 1: BOTTOM HALF 64MB ROM
RTCCLK	PD	0	0	BYPASS RTC 0: NORMAL MODE, 32KHZ XTAL AS SOURCE 1: RTCCLK IS INPUT & USED AS BYPASS CLK
ESPI_CLK2/AGPIO74	PD	0	0	RSVD

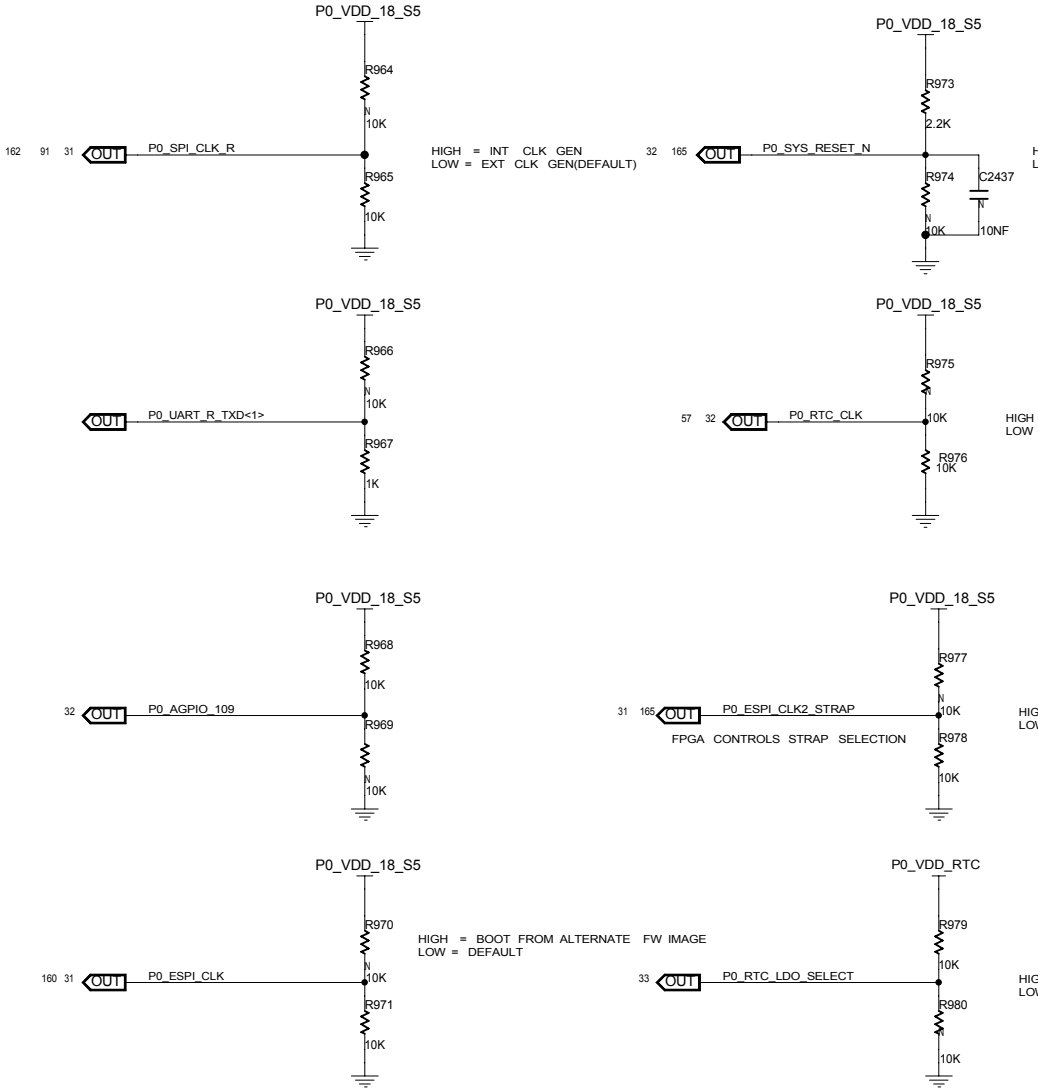

MODULE=---

FUNCTION=---

CNIT TECHNOLOGIES CO.,LTD.				
BOARD NAME MB-CADT24D_VERA			DRAWINGNO CNIT0302K1XKDL	
DESIGNED	yujianjiang00259	DATE <DATE_DN>	SHEET 28 OF 200	REV
REVIEWED	<REVIEWED>	DATE <DATE_RW>	Sat Sep 13 14:13:33 2025	

THIS DOCUMENT AND THE TECHNICAL DATA DISCLOSED ARE PROPRIETARY TO CNIT TECHNOLOGIES CO., LTD. AND SHALL NOT BE DUPLICATED USED RELEASED OR DISCLOSED WITHOUT EXPRESSING WRITTEN PERMISSION.

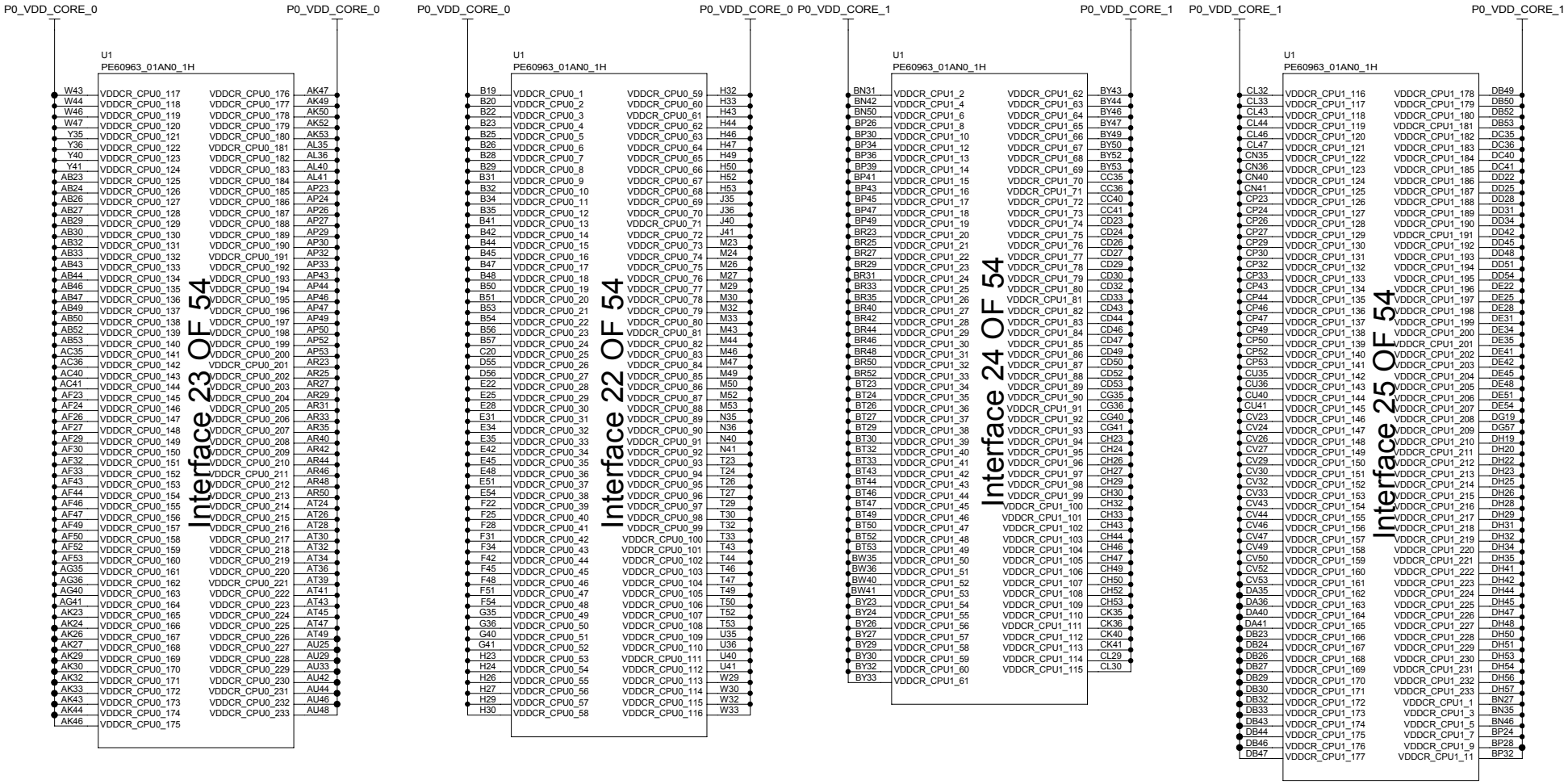

MODULE=---

FUNCTION=---

CNIT TECHNOLOGIES CO.,LTD.				
BOARD NAME MB-CADT24D_VERA			DRAWINGNO CNIT0302K1XKDL	
DESIGNED	yujianjiang00259	DATE <DATE_DN>	SHEET 29 OF 200	REV
REVIEWED	<REVIEWED>	DATE <DATE_RW>	Fri Aug 29 11:20:44 2025	

THIS DOCUMENT AND THE TECHNICAL DATA DISCLOSED ARE PROPRIETARY TO CNIT TECHNOLOGIES CO., LTD. AND SHALL NOT BE DUPLICATED USED RELEASED OR DISCLOSED WITHOUT EXPRESSING WRITTEN PERMISSION.

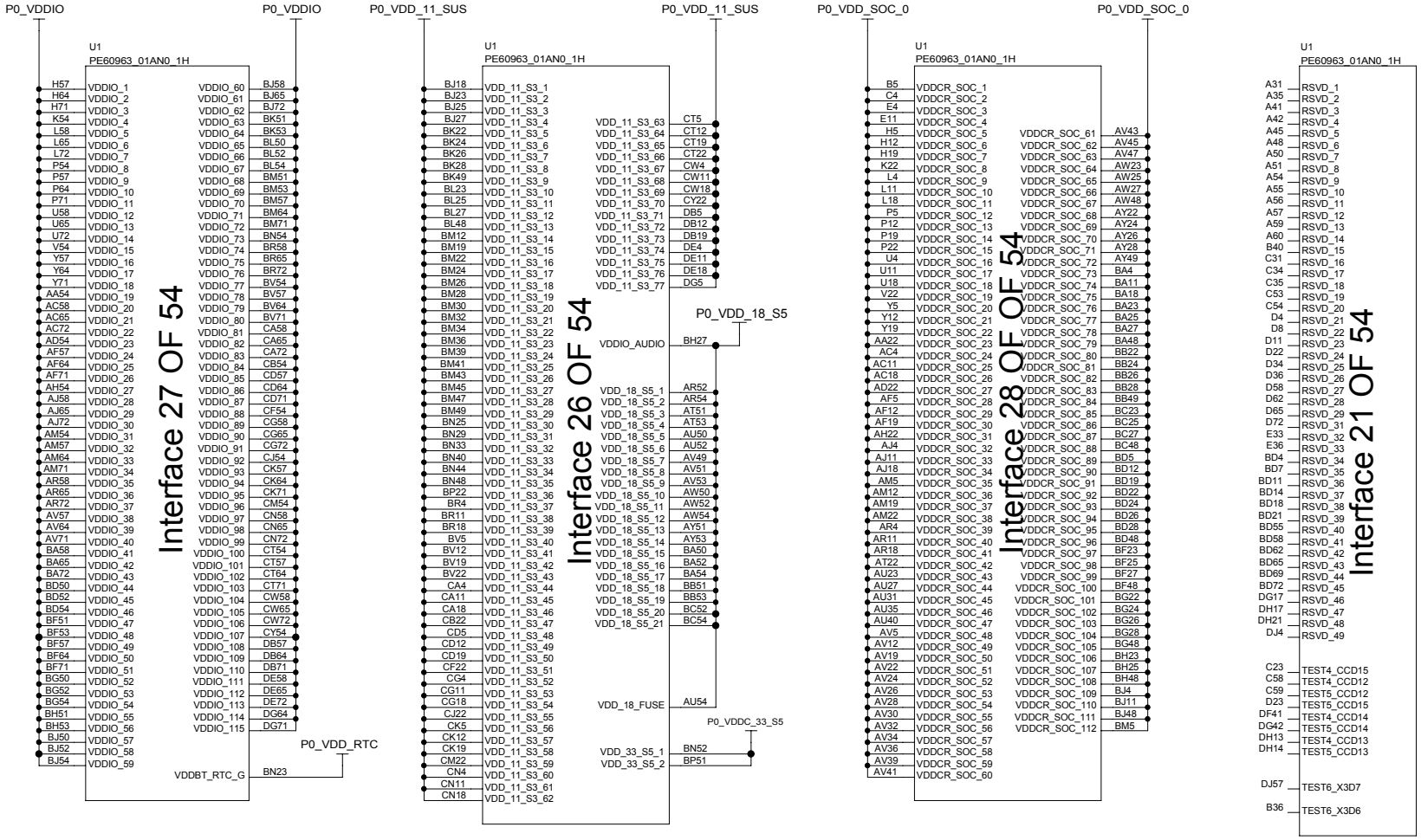

MODULE=---

FUNCTION=---

CNIT TECHNOLOGIES CO.,LTD.				
BOARD NAME MB-CADT24D_VERA			DRAWINGNO CNIT0302K1XKDL	
DESIGNED	yujianjiang00259	DATE <DATE_DN>	SHEET 30 OF 200	REV
REVIEWED	<REVIEWED>	DATE <DATE_RW>	Fri Aug 29 11:20:45 2025	

THIS DOCUMENT AND THE TECHNICAL DATA DISCLOSED ARE PROPRIETARY TO CNIT TECHNOLOGIES CO., LTD. AND SHALL NOT BE DUPLICATED USED RELEASED OR DISCLOSED WITHOUT EXPRESSING WRITTEN PERMISSION.

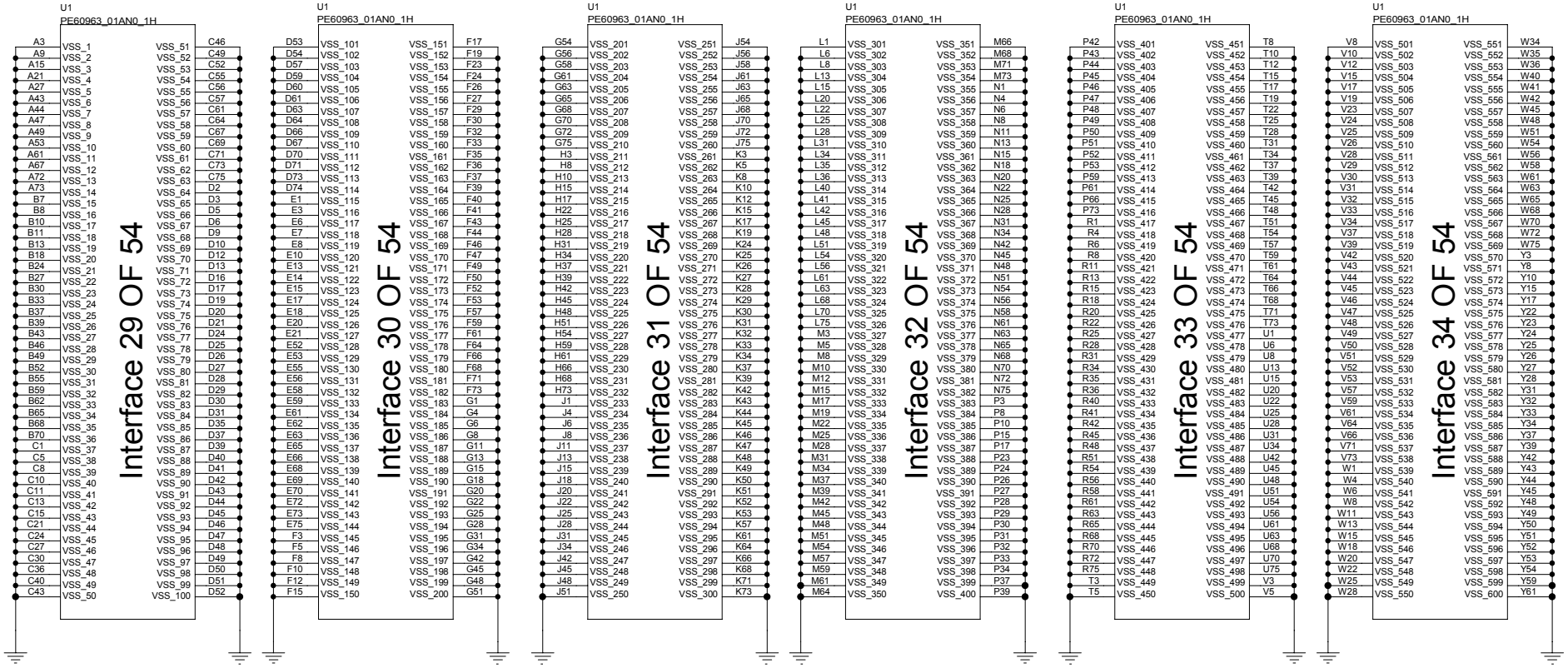

MODULE=---

FUNCTION=---

CNIT TECHNOLOGIES CO.,LTD.				
BOARD NAME MB-CADT24D_VERA			DRAWINGNO CNIT0302K1XKDL	
DESIGNED	yujianjiang00259	DATE <DATE_DN>	SHEET 31 OF 200	REV
REVIEWED	<REVIEWED>	DATE <DATE_RW>	Fri Aug 29 11:20:46 2025	

THIS DOCUMENT AND THE TECHNICAL DATA DISCLOSED ARE PROPRIETARY TO CNIT TECHNOLOGIES CO., LTD. AND SHALL NOT BE DUPLICATED USED RELEASED OR DISCLOSED WITHOUT EXPRESSING WRITTEN PERMISSION.

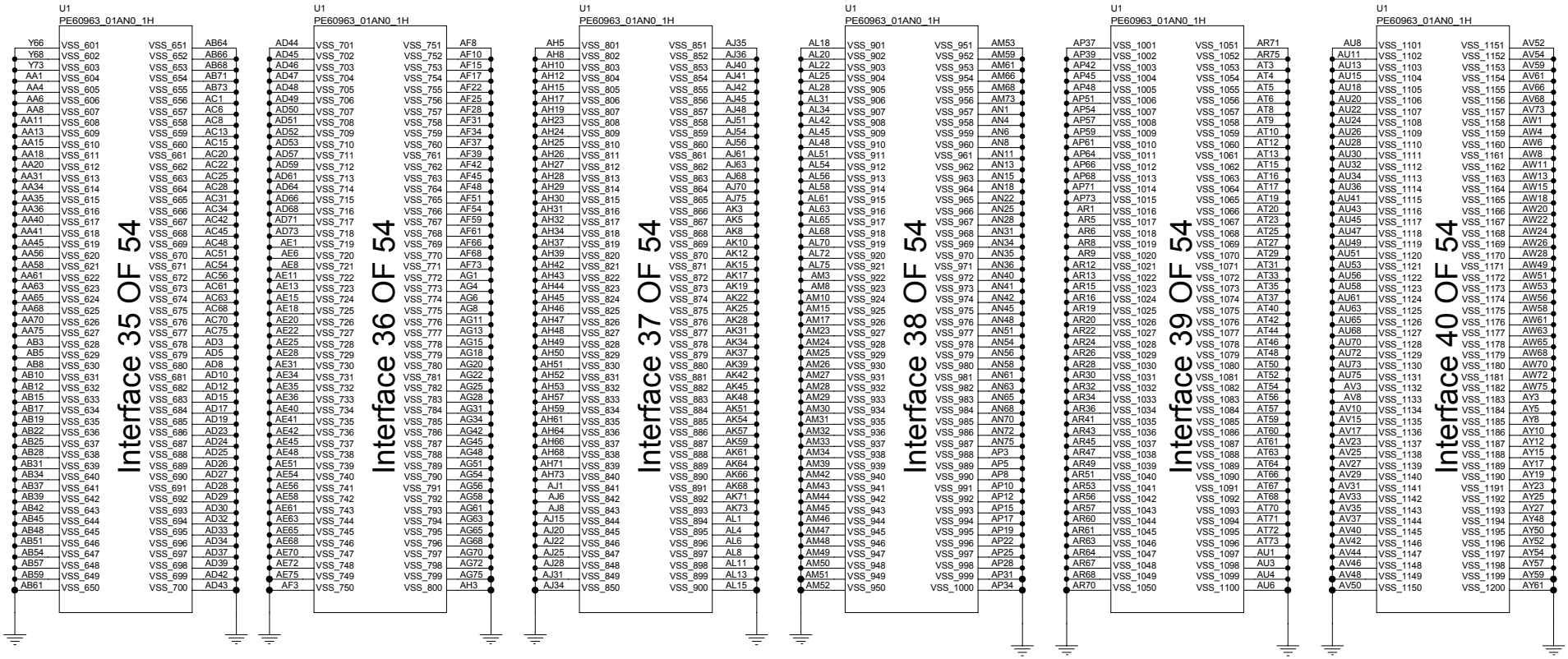

MODULE=---

FUNCTION=---

CNIT TECHNOLOGIES CO.,LTD.				
BOARD NAME MB-CADT24D_VERA			DRAWINGNO CNIT0302K1XKDL	
DESIGNED	yujianjiang00259	DATE <DATE_DN>	SHEET 32 OF 200	REV
REVIEWED	<REVIEWED>	DATE <DATE_RW>	Fri Aug 29 11:20:47 2025	

THIS DOCUMENT AND THE TECHNICAL DATA DISCLOSED ARE PROPRIETARY TO CNIT TECHNOLOGIES CO., LTD. AND SHALL NOT BE DUPLICATED USED RELEASED OR DISCLOSED WITHOUT EXPRESSING WRITTEN PERMISSION.

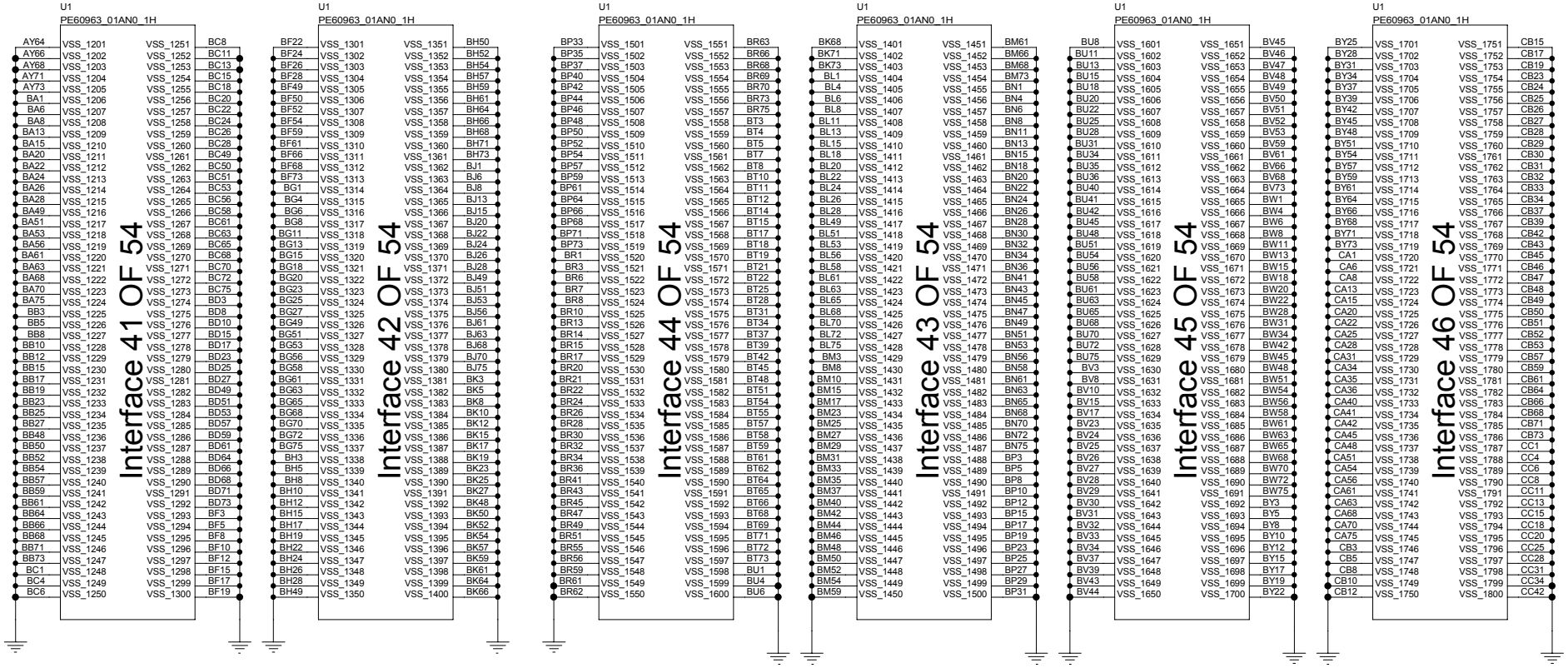

MODULE=---

FUNCTION=---

CNIT TECHNOLOGIES CO.,LTD.				
BOARD NAME MB-CADT24D_VERA			DRAWINGNO CNIT0302K1XKDL	
DESIGNED	yujianjiang00259	DATE <DATE_DN>	SHEET 33 OF 200	REV
REVIEWED	<REVIEWED>	DATE <DATE_RW>	Fri Aug 29 11:20:48 2025	

THIS DOCUMENT AND THE TECHNICAL DATA DISCLOSED ARE PROPRIETARY TO CNIT TECHNOLOGIES CO., LTD. AND SHALL NOT BE DUPLICATED USED RELEASED OR DISCLOSED WITHOUT EXPRESSING WRITTEN PERMISSION.

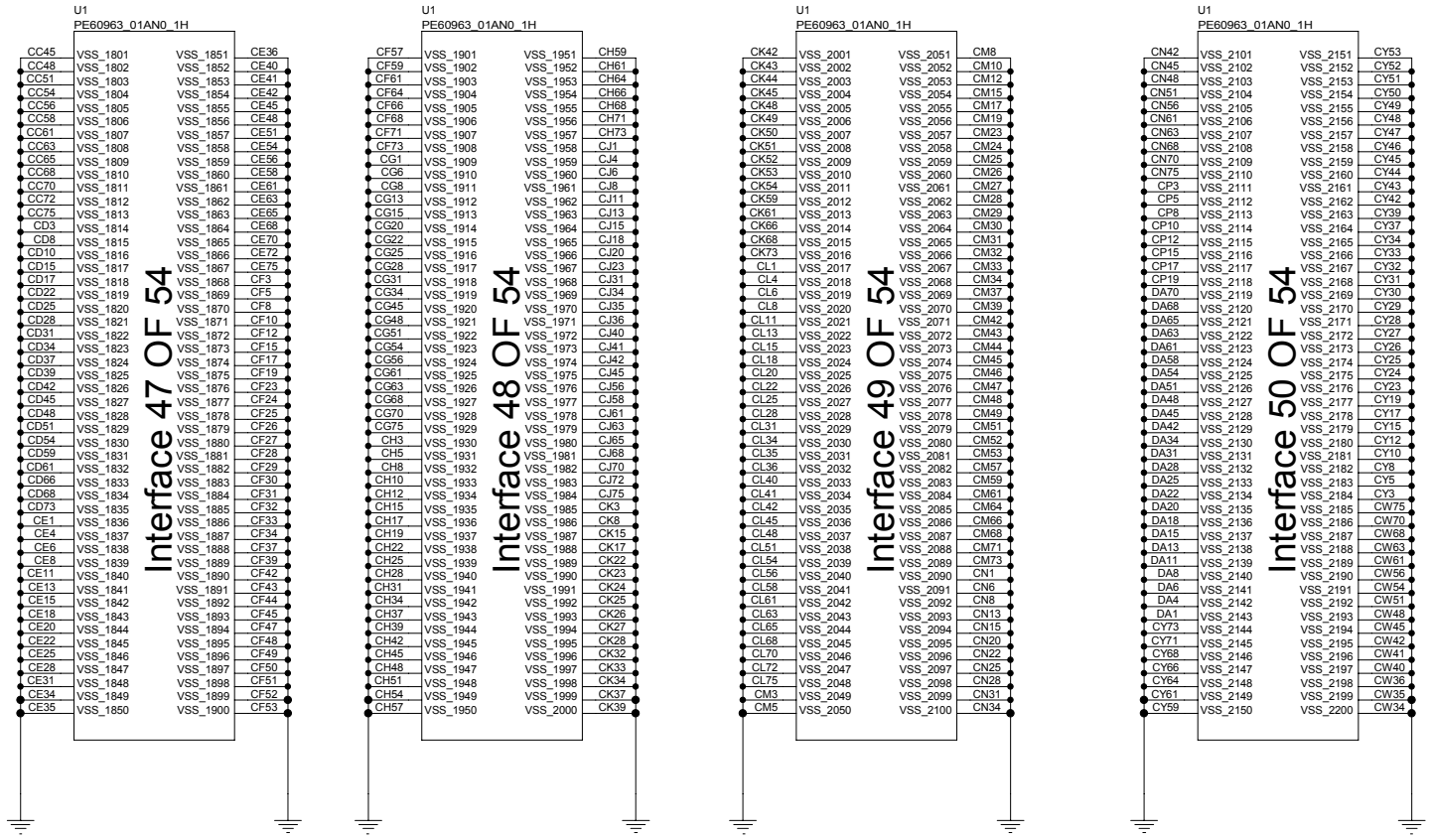

MODULE=---

FUNCTION=---

CNIT TECHNOLOGIES CO.,LTD.				
BOARD NAME MB-CADT24D_VERA			DRAWINGNO CNIT0302K1XKDL	
DESIGNED	yujianjiang00259	DATE <DATE_DN>	SHEET 34 OF 200	REV
REVIEWED	<REVIEWED>	DATE <DATE_RW>	Fri Aug 29 11:20:49 2025	

THIS DOCUMENT AND THE TECHNICAL DATA DISCLOSED ARE PROPRIETARY TO CNIT TECHNOLOGIES CO., LTD. AND SHALL NOT BE DUPLICATED USED RELEASED OR DISCLOSED WITHOUT EXPRESSING WRITTEN PERMISSION.

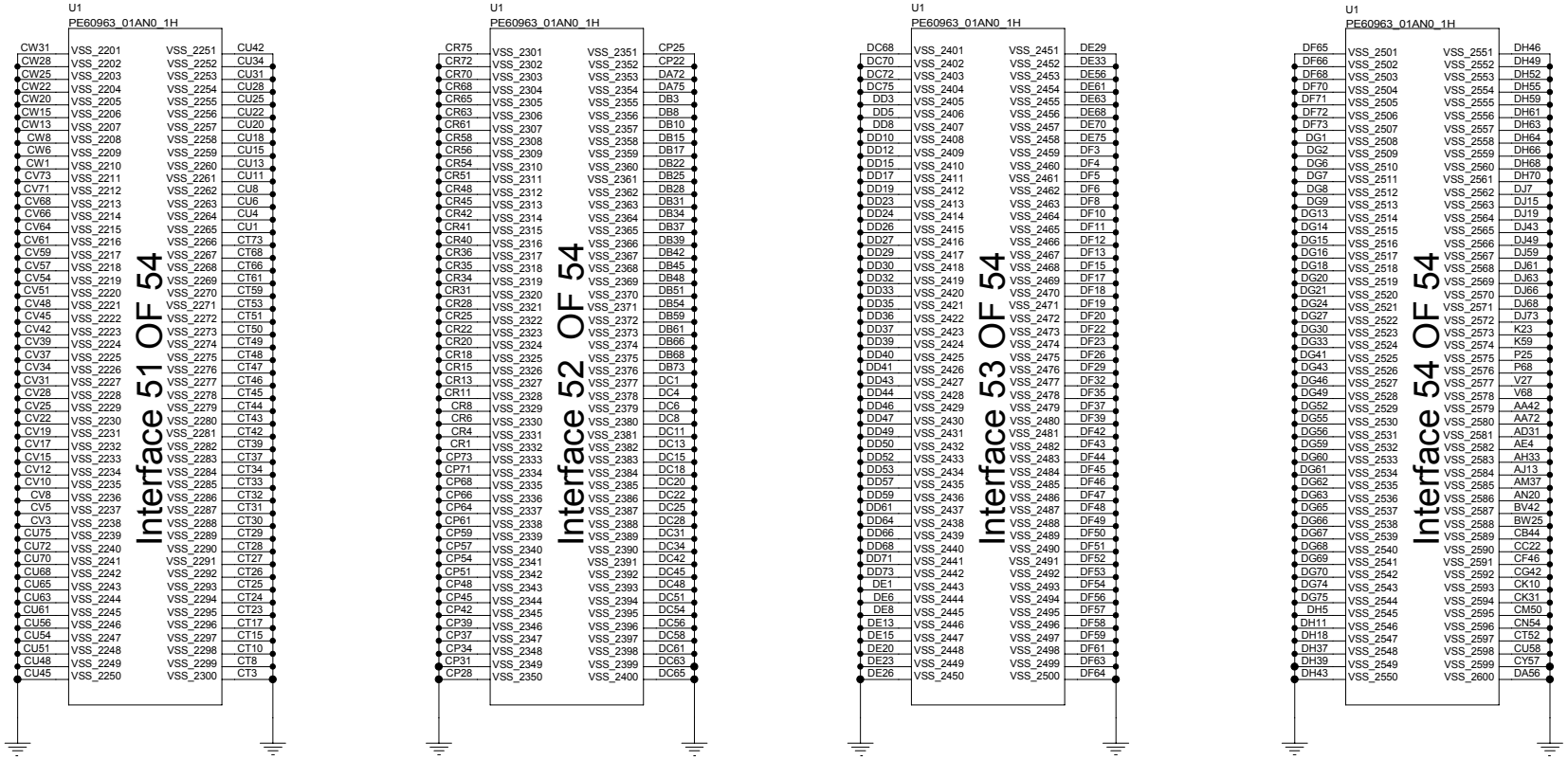

MODULE=---

FUNCTION=---

CNIT TECHNOLOGIES CO.,LTD.				
BOARD NAME MB-CADT24D_VERA			DRAWINGNO CNIT0302K1XKDL	
DESIGNED	yujianjiang00259	DATE <DATE_DN>	SHEET 35 OF 200	REV
REVIEWED	<REVIEWED>	DATE <DATE_RW>	Fri Aug 29 11:20:49 2025	

THIS DOCUMENT AND THE TECHNICAL DATA DISCLOSED ARE PROPRIETARY TO CNIT TECHNOLOGIES CO., LTD. AND SHALL NOT BE DUPLICATED USED RELEASED OR DISCLOSED WITHOUT EXPRESSING WRITTEN PERMISSION.

MODULE=---

FUNCTION=---

CNIT TECHNOLOGIES CO.,LTD.				
BOARD NAME MB-CADT24D_VERA			DRAWINGNO CNIT0302K1XKDL	
DESIGNED	yujianjiang00259	DATE <DATE_DN>	SHEET 36 OF 200	REV
REVIEWED	<REVIEWED>	DATE <DATE_RW>	Fri Aug 29 11:20:50 2025	

THIS DOCUMENT AND THE TECHNICAL DATA DISCLOSED ARE PROPRIETARY TO CNIT TECHNOLOGIES CO., LTD. AND SHALL NOT BE DUPLICATED USED RELEASED OR DISCLOSED WITHOUT EXPRESSING WRITTEN PERMISSION.

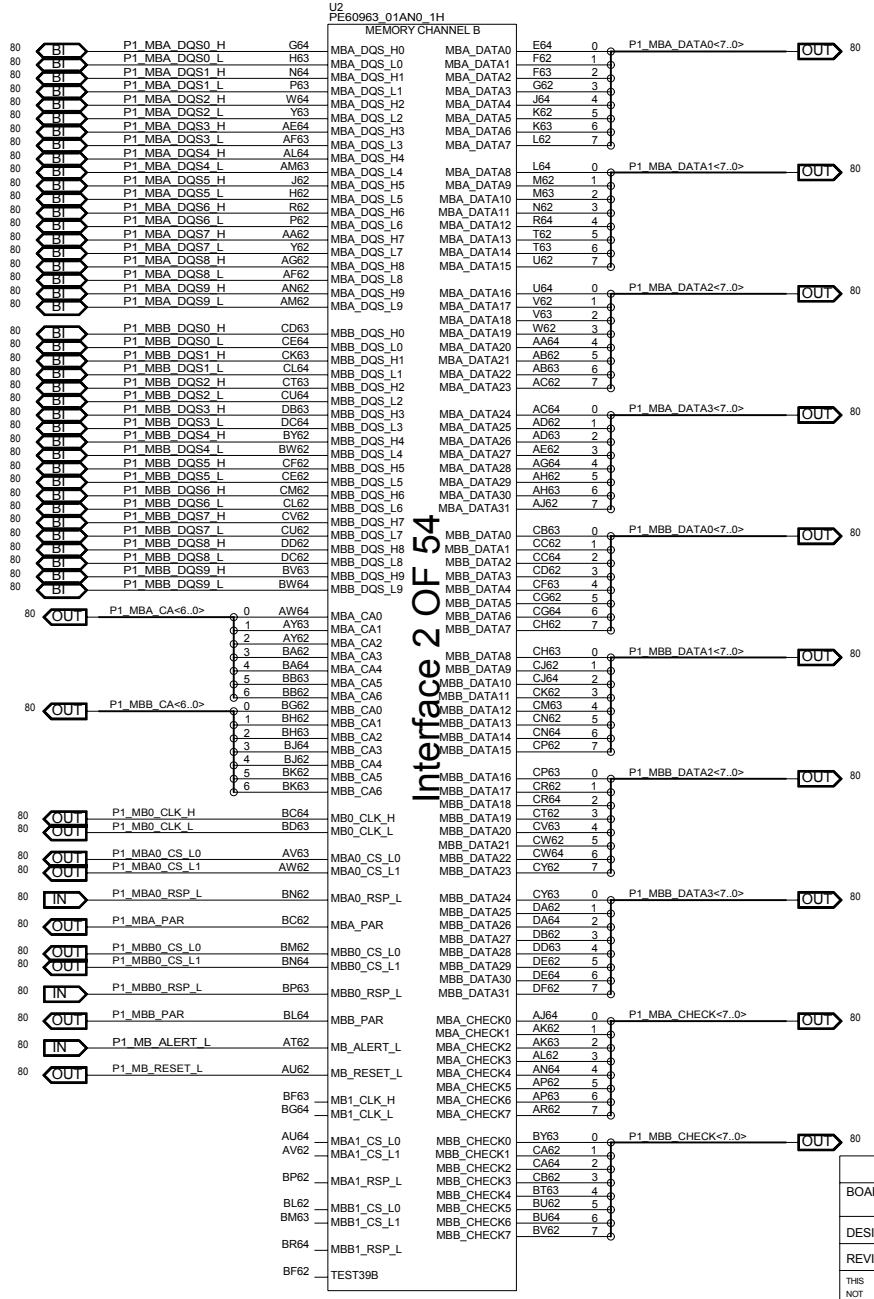

MODULE=---

FUNCTION=---

CNIT TECHNOLOGIES CO.,LTD.				
BOARD NAME MB-CADT24D_VERA			DRAWINGNO CNIT0302K1XKDL	
DESIGNED	yujianjiang00259	DATE <DATE_DN>	SHEET 37 OF 200	REV
REVIEWED	<REVIEWED>	DATE <DATE_RW>	Fri Aug 29 11:20:50 2025	

THIS DOCUMENT AND THE TECHNICAL DATA DISCLOSED ARE PROPRIETARY TO CNIT TECHNOLOGIES CO., LTD. AND SHALL NOT BE DUPLICATED USED RELEASED OR DISCLOSED WITHOUT EXPRESSING WRITTEN PERMISSION.

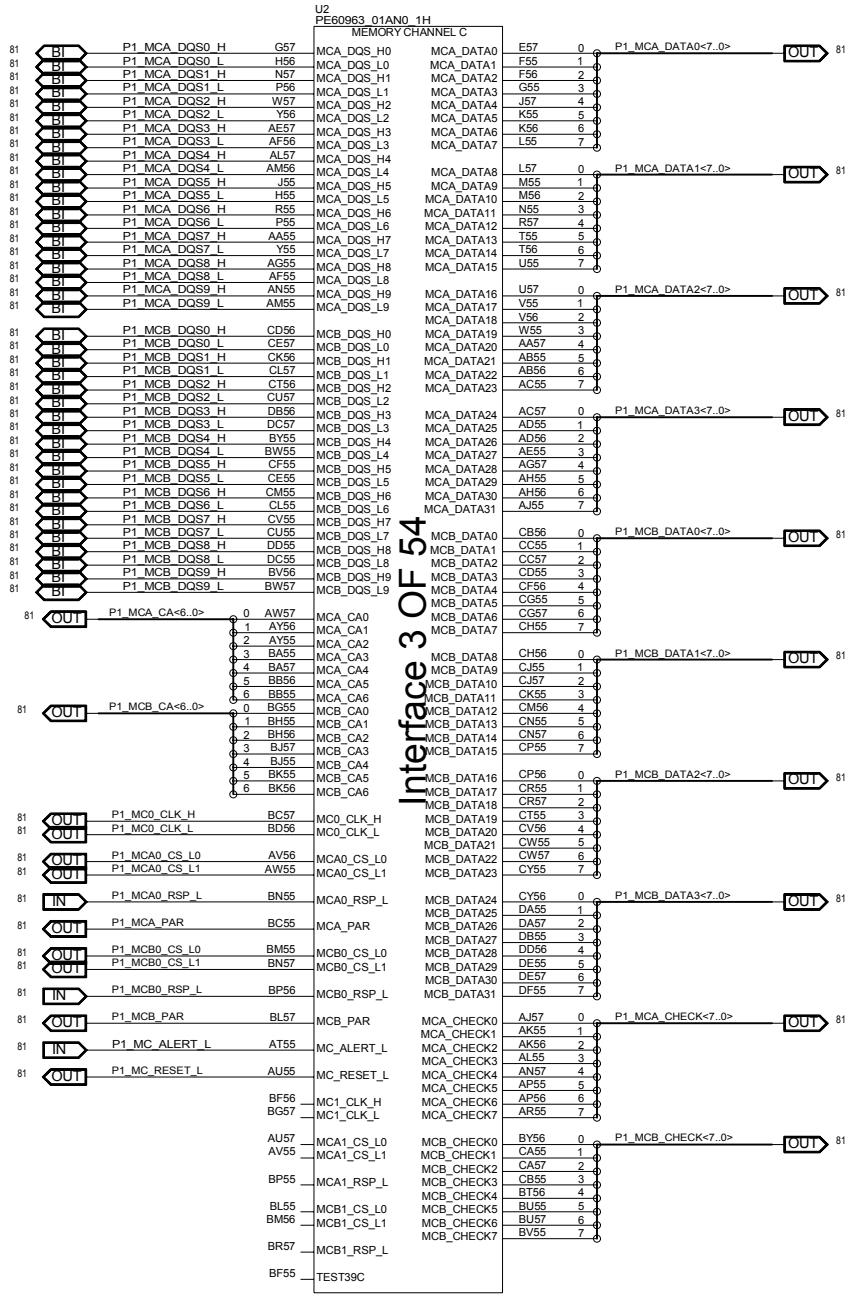

MODULE=---

FUNCTION=---

CNIT TECHNOLOGIES CO.,LTD.				
BOARD NAME MB-CADT24D_VERA			DRAWINGNO CNIT0302K1XKDL	
DESIGNED	yujianjiang00259	DATE <DATE_DN>	SHEET 38 OF 200	REV
REVIEWED	<REVIEWED>	DATE <DATE_RW>	Fri Aug 29 11:20:51 2025	

THIS DOCUMENT AND THE TECHNICAL DATA DISCLOSED ARE PROPRIETARY TO CNIT TECHNOLOGIES CO., LTD. AND SHALL NOT BE DUPLICATED USED RELEASED OR DISCLOSED WITHOUT EXPRESSING WRITTEN PERMISSION.

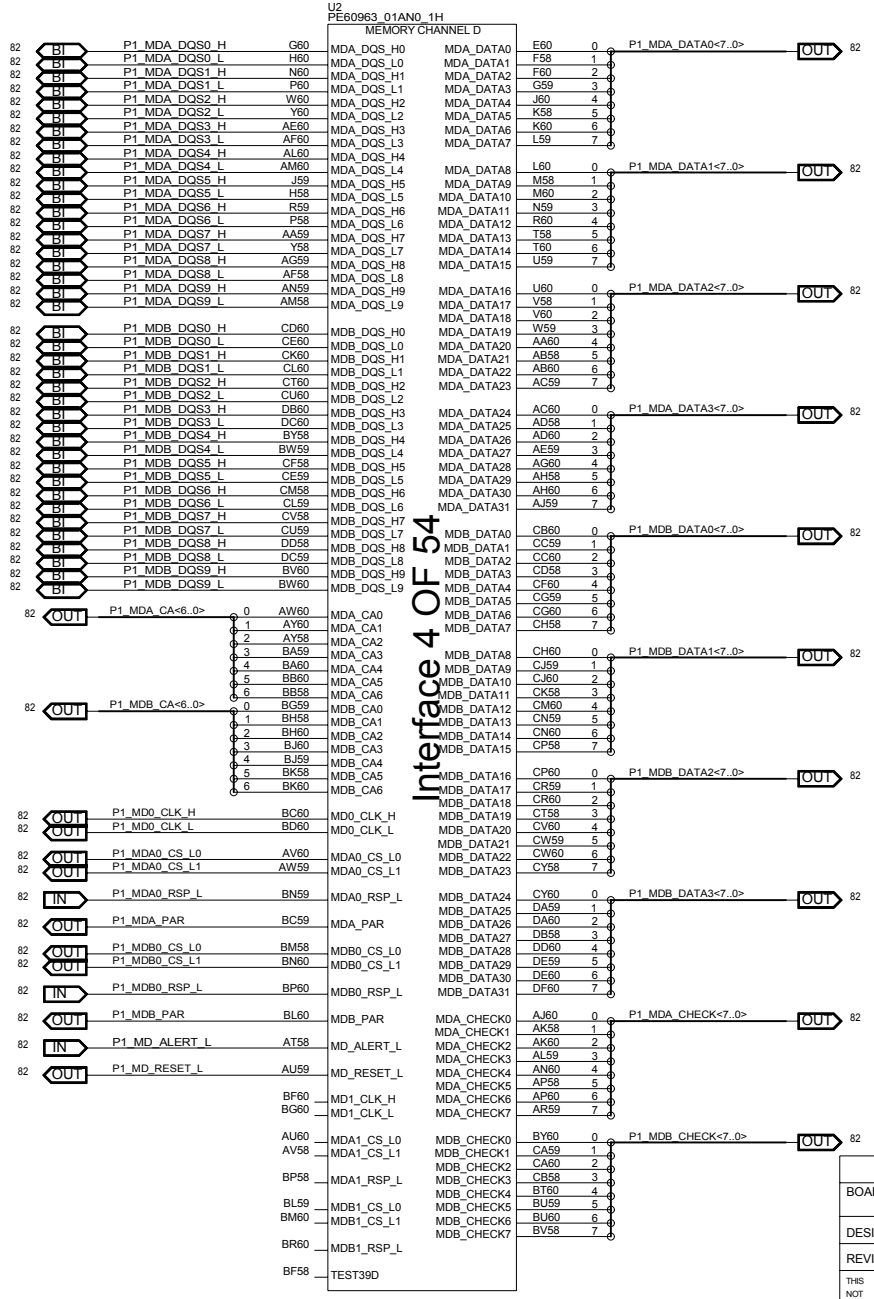

MODULE=---

FUNCTION=---

CNIT TECHNOLOGIES CO.,LTD.				
BOARD NAME MB-CADT24D_VERA			DRAWINGNO CNIT0302K1XKDL	
DESIGNED	yujianjiang00259	DATE <DATE_DN>	SHEET 39 OF 200	REV
REVIEWED	<REVIEWED>	DATE <DATE_RW>	Fri Aug 29 11:20:51 2025	

THIS DOCUMENT AND THE TECHNICAL DATA DISCLOSED ARE PROPRIETARY TO CNIT TECHNOLOGIES CO., LTD. AND SHALL NOT BE DUPLICATED USED RELEASED OR DISCLOSED WITHOUT EXPRESSING WRITTEN PERMISSION.

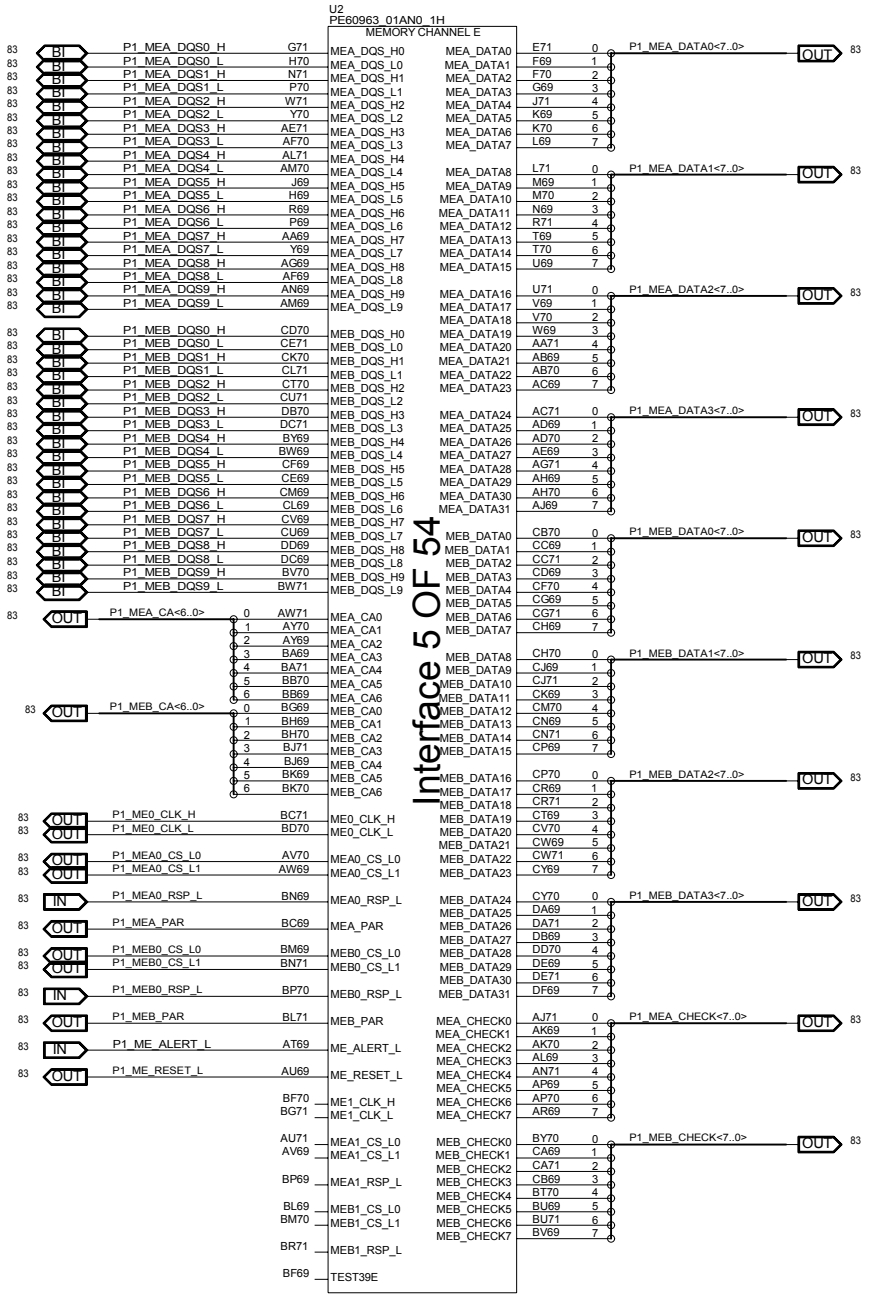

MODULE=---

FUNCTION=---

CNIT TECHNOLOGIES CO.,LTD.				
BOARD NAME MB-CADT24D_VERA			DRAWINGNO CNIT0302K1XKDL	
DESIGNED	yujianjiang00259	DATE <DATE_DN>	SHEET 40 OF 200	REV
REVIEWED	<REVIEWED>	DATE <DATE_RW>	Fri Aug 29 11:20:52 2025	

THIS DOCUMENT AND THE TECHNICAL DATA DISCLOSED ARE PROPRIETARY TO CNIT TECHNOLOGIES CO., LTD. AND SHALL NOT BE DUPLICATED USED RELEASED OR DISCLOSED WITHOUT EXPRESSING WRITTEN PERMISSION.

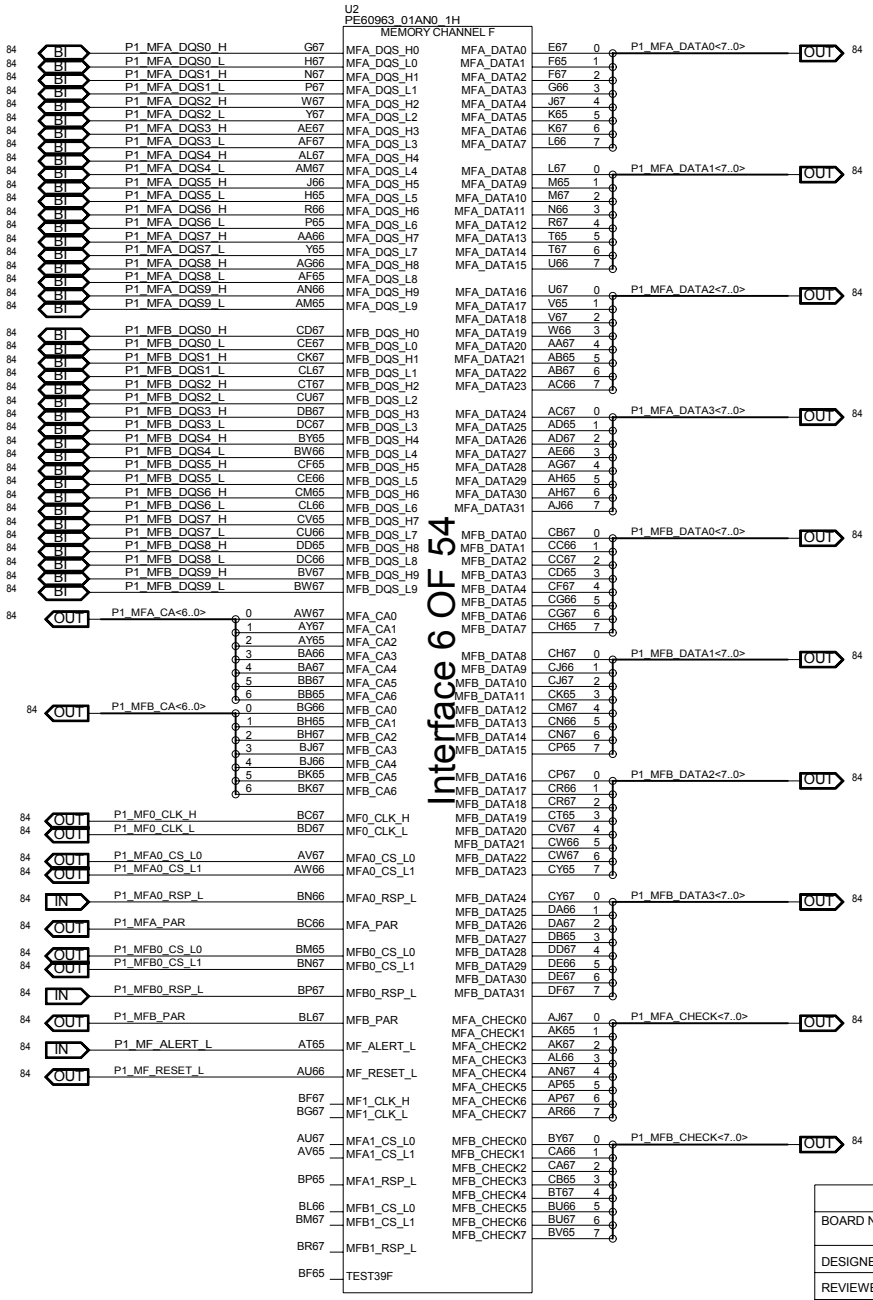

MODULE=---

FUNCTION=---

CNIT TECHNOLOGIES CO.,LTD.				
BOARD NAME MB-CADT24D_VERA			DRAWINGNO CNIT0302K1XKDL	
DESIGNED	yujianjiang00259	DATE <DATE_DN>	SHEET 41 OF 200	REV
REVIEWED	<REVIEWED>	DATE <DATE_RW>	Fri Aug 29 11:20:52 2025	

THIS DOCUMENT AND THE TECHNICAL DATA DISCLOSED ARE PROPRIETARY TO CNIT TECHNOLOGIES CO., LTD. AND SHALL NOT BE DUPLICATED USED RELEASED OR DISCLOSED WITHOUT EXPRESSING WRITTEN PERMISSION.

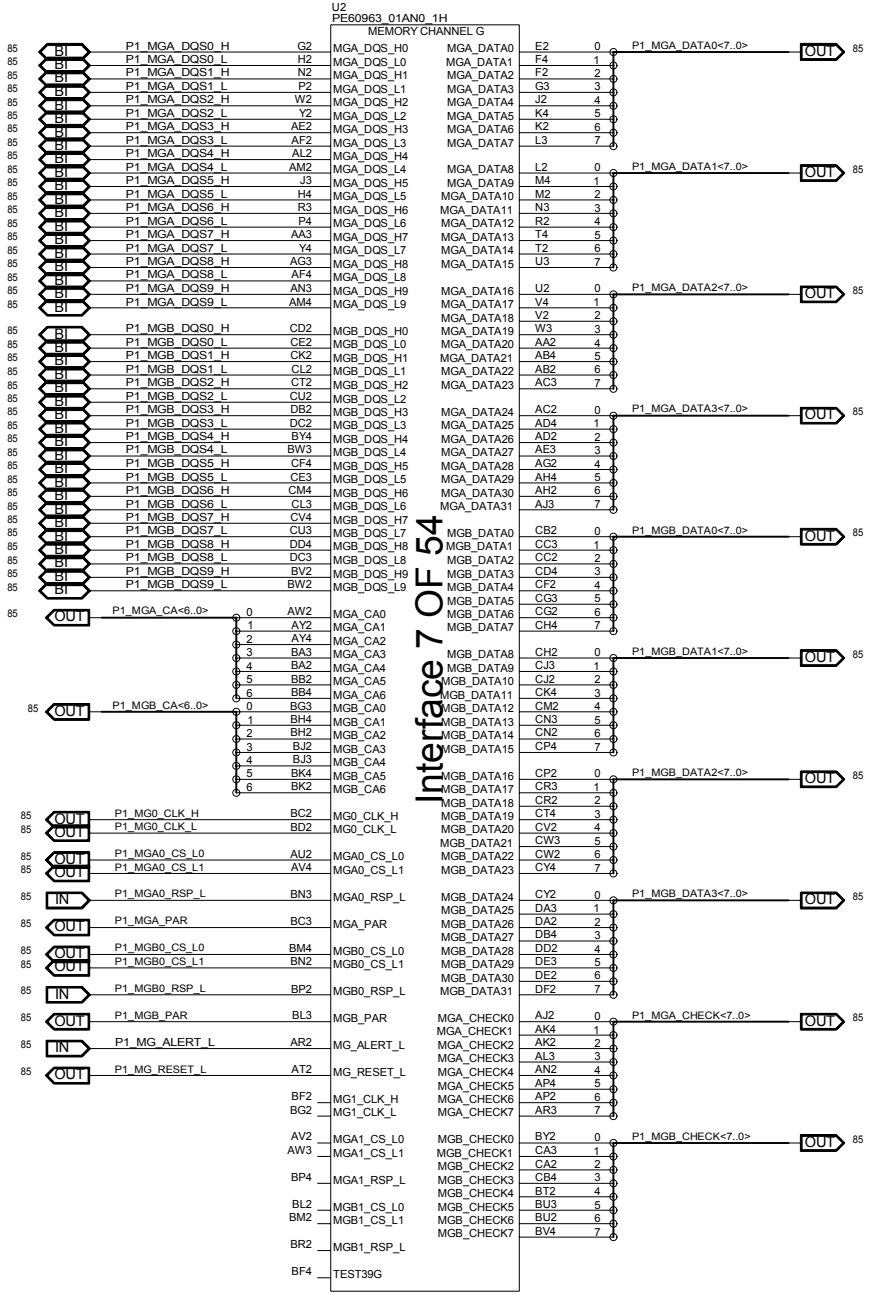

MODULE=---

FUNCTION=---

CNIT TECHNOLOGIES CO.,LTD.				
BOARD NAME MB-CADT24D_VERA			DRAWINGNO CNIT0302K1XKDL	
DESIGNED	yujianjiang00259	DATE <DATE_DN>	SHEET 42 OF 200	REV
REVIEWED	<REVIEWED>	DATE <DATE_RW>	Fri Aug 29 11:20:53 2025	

THIS DOCUMENT AND THE TECHNICAL DATA DISCLOSED ARE PROPRIETARY TO CNIT TECHNOLOGIES CO., LTD. AND SHALL NOT BE DUPLICATED USED RELEASED OR DISCLOSED WITHOUT EXPRESSING WRITTEN PERMISSION.

MODULE=---

FUNCTION=---

CNIT TECHNOLOGIES CO.,LTD.				
BOARD NAME MB-CADT24D_VERA			DRAWINGNO CNIT0302K1XKDL	
DESIGNED	yujianjiang00259	DATE <DATE_DN>	SHEET 43 OF 200	REV
REVIEWED	<REVIEWED>	DATE <DATE_RW>	Fri Aug 29 11:20:53 2025	

THIS DOCUMENT AND THE TECHNICAL DATA DISCLOSED ARE PROPRIETARY TO CNIT TECHNOLOGIES CO., LTD. AND SHALL NOT BE DUPLICATED USED RELEASED OR DISCLOSED WITHOUT EXPRESSING WRITTEN PERMISSION.

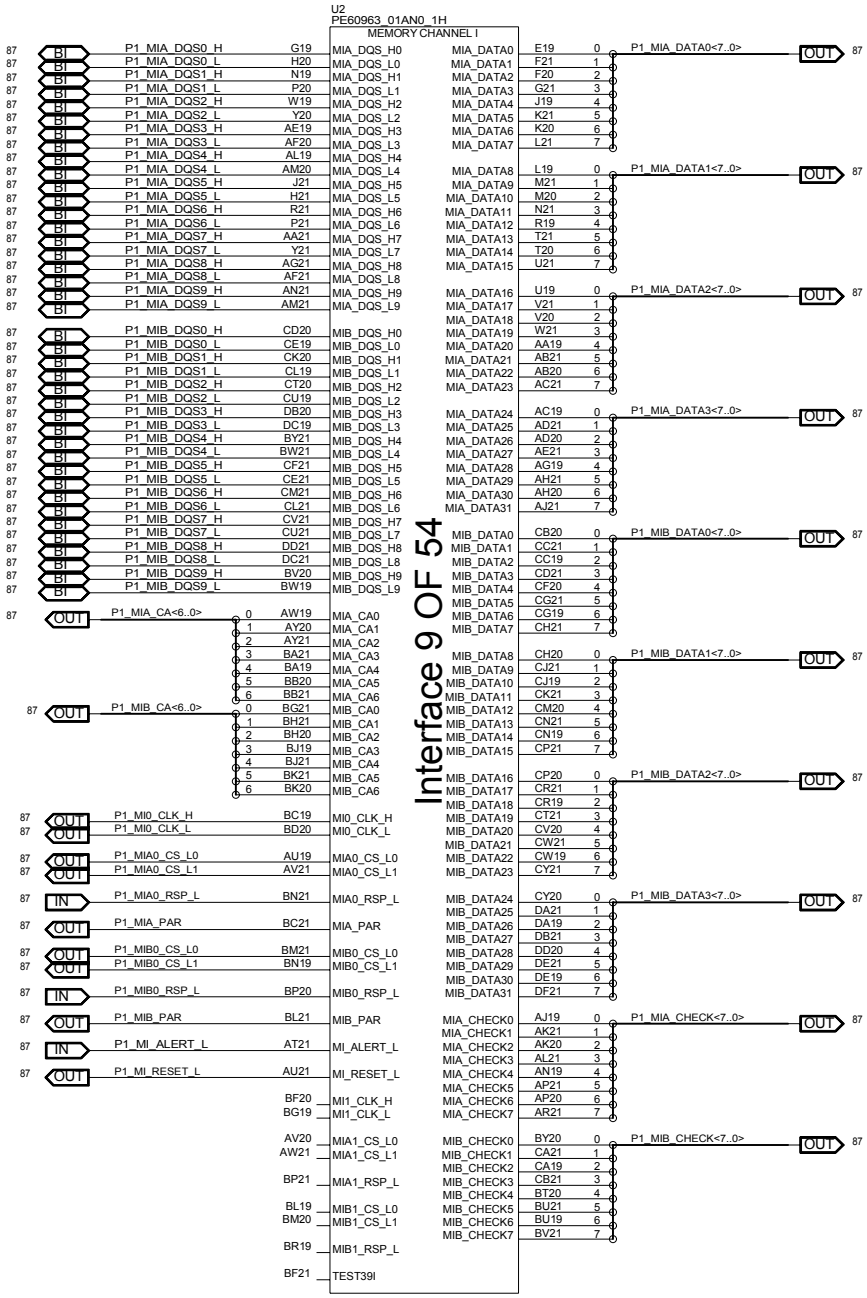

MODULE=---

FUNCTION=---

CNIT TECHNOLOGIES CO.,LTD.				
BOARD NAME MB-CADT24D_VERA			DRAWINGNO CNIT0302K1XKDL	
DESIGNED	yujianjiang00259	DATE <DATE_DN>	SHEET 44 OF 200	REV
REVIEWED	<REVIEWED>	DATE <DATE_RW>	Fri Aug 29 11:20:54 2025	

THIS DOCUMENT AND THE TECHNICAL DATA DISCLOSED ARE PROPRIETARY TO CNIT TECHNOLOGIES CO., LTD. AND SHALL NOT BE DUPLICATED USED RELEASED OR DISCLOSED WITHOUT EXPRESSING WRITTEN PERMISSION.

MODULE=---

FUNCTION=---

CNIT TECHNOLOGIES CO.,LTD.				
BOARD NAME MB-CADT24D_VERA			DRAWINGNO CNIT0302K1XKDL	
DESIGNED	yujianjiang00259	DATE <DATE_DN>	SHEET 45 OF 200	REV
REVIEWED	<REVIEWED>	DATE <DATE_RW>	Fri Aug 29 11:20:54 2025	

THIS DOCUMENT AND THE TECHNICAL DATA DISCLOSED ARE PROPRIETARY TO CNIT TECHNOLOGIES CO., LTD. AND SHALL NOT BE DUPLICATED USED RELEASED OR DISCLOSED WITHOUT EXPRESSING WRITTEN PERMISSION.

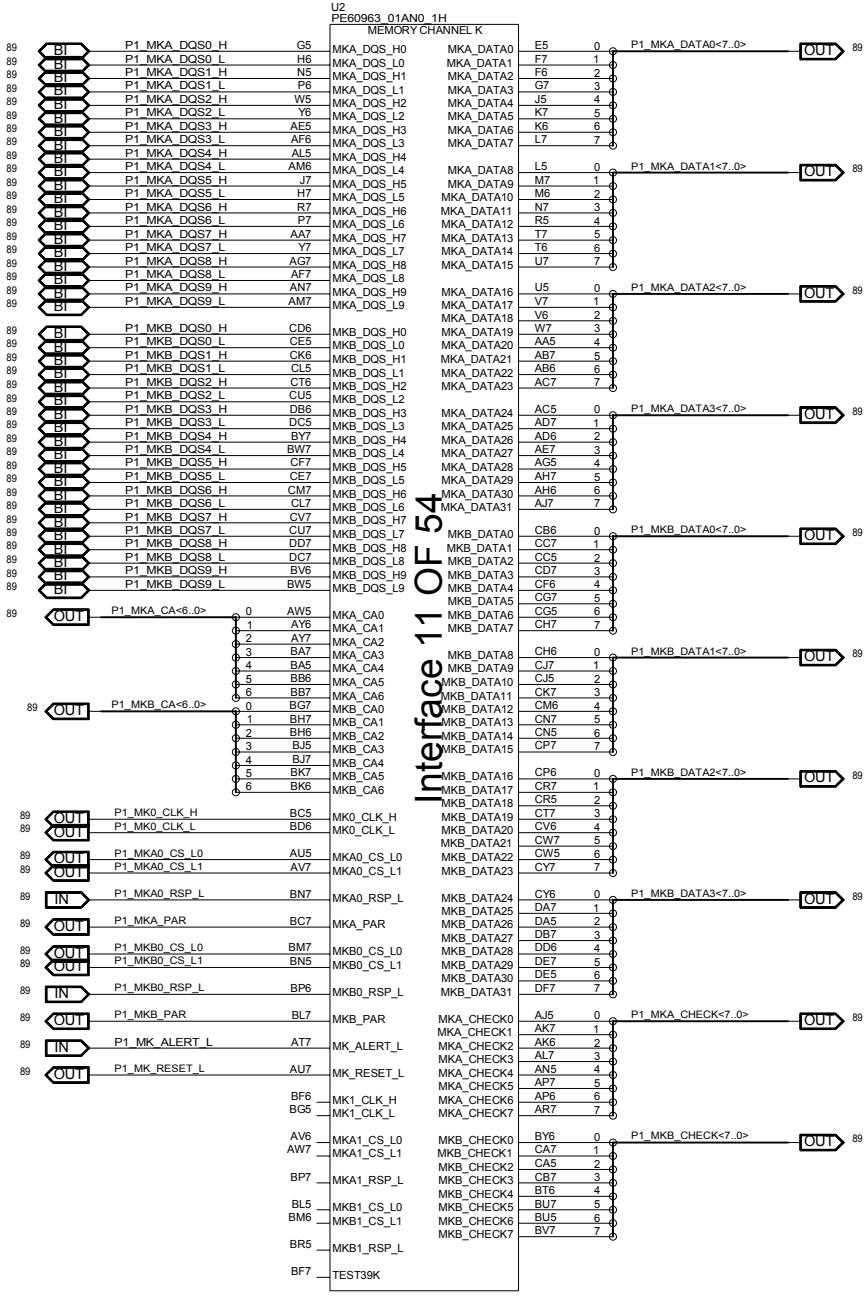

MODULE=---

FUNCTION=---

CNIT TECHNOLOGIES CO.,LTD.				
BOARD NAME MB-CADT24D_VERA			DRAWINGNO CNIT0302K1XKDL	
DESIGNED	yujianjiang00259	DATE <DATE_DN>	SHEET 46 OF 200	REV
REVIEWED	<REVIEWED>	DATE <DATE_RW>	Fri Aug 29 11:20:55 2025	

THIS DOCUMENT AND THE TECHNICAL DATA DISCLOSED ARE PROPRIETARY TO CNIT TECHNOLOGIES CO., LTD. AND SHALL NOT BE DUPLICATED USED RELEASED OR DISCLOSED WITHOUT EXPRESSING WRITTEN PERMISSION.

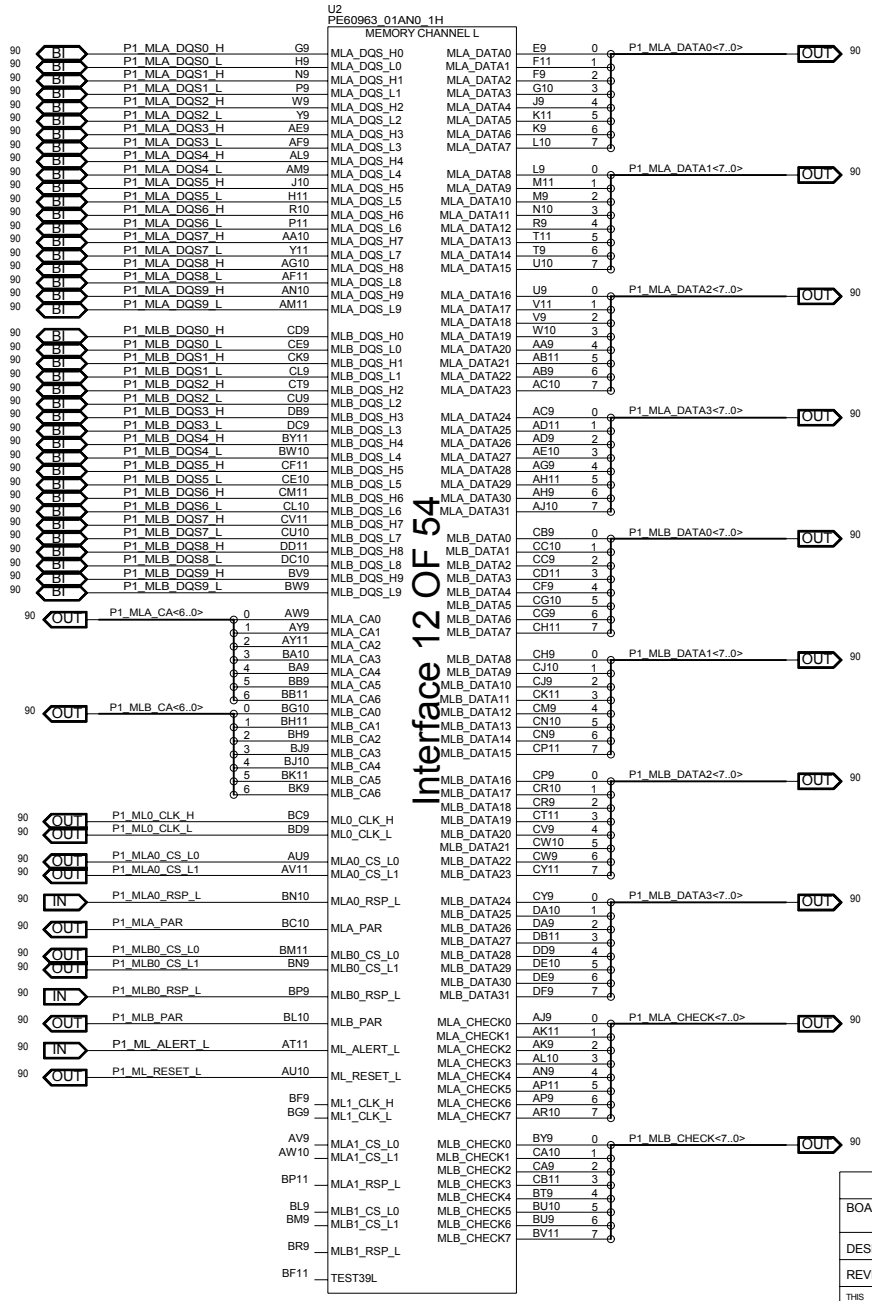

MODULE=---

FUNCTION=---

CNIT TECHNOLOGIES CO.,LTD.				
BOARD NAME MB-CADT24D_VERA			DRAWINGNO CNIT0302K1XKDL	
DESIGNED	yujianjiang00259	DATE <DATE_DN>	SHEET 47 OF 200	REV
REVIEWED	<REVIEWED>	DATE <DATE_RW>	Fri Aug 29 11:20:55 2025	

THIS DOCUMENT AND THE TECHNICAL DATA DISCLOSED ARE PROPRIETARY TO CNIT TECHNOLOGIES CO., LTD. AND SHALL NOT BE DUPLICATED USED RELEASED OR DISCLOSED WITHOUT EXPRESSING WRITTEN PERMISSION.

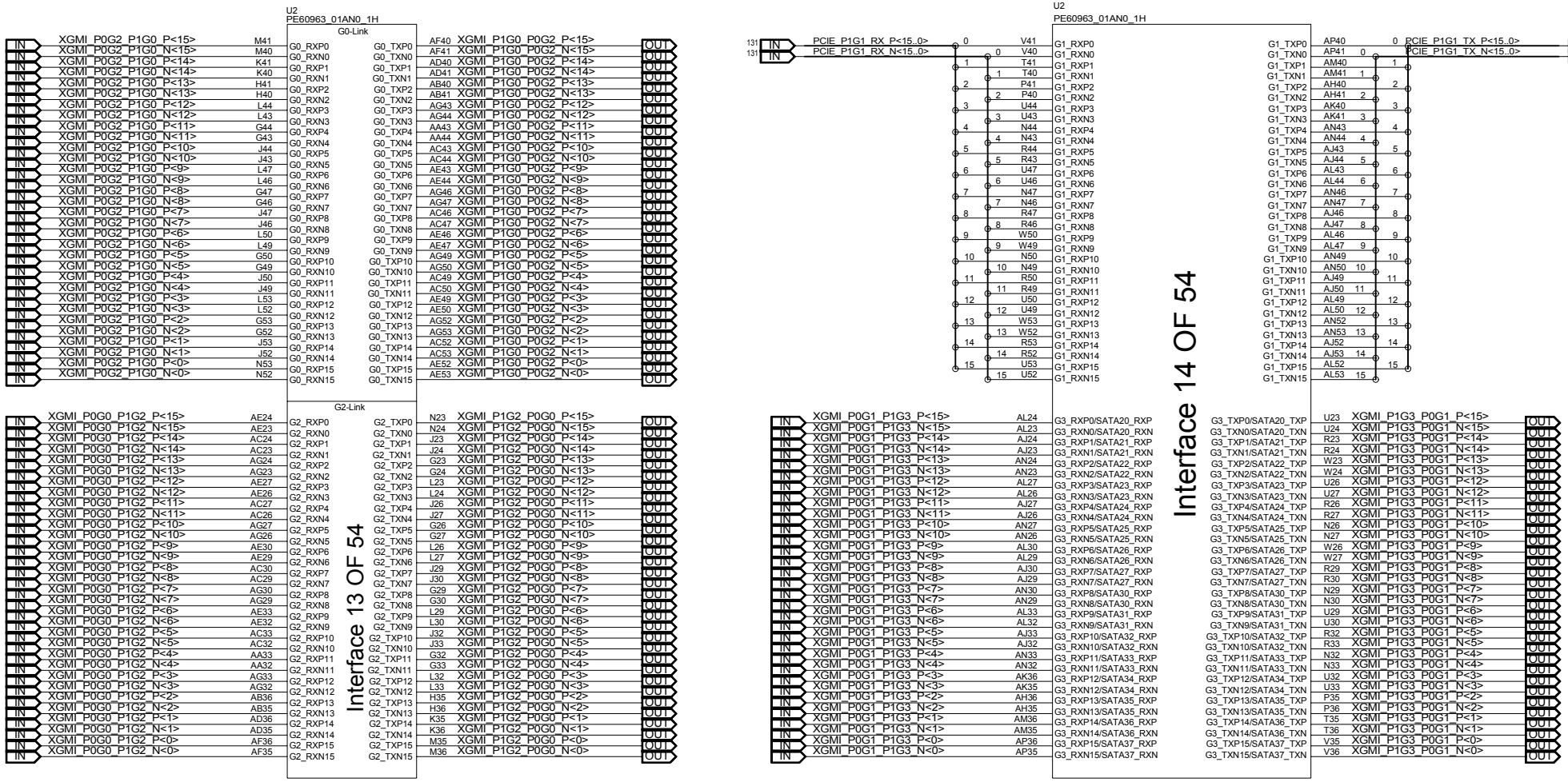

MODULE=---

FUNCTION=---

CNIT TECHNOLOGIES CO.,LTD.				
BOARD NAME MB-CADT24D_VERA			DRAWINGNO CNIT0302K1XKDL	
DESIGNED	yujianjiang00259	DATE <DATE_DN>	SHEET 48 OF 200	REV
REVIEWED	<REVIEWED>	DATE <DATE_RW>	Fri Aug 29 11:20:56 2025	

THIS DOCUMENT AND THE TECHNICAL DATA DISCLOSED ARE PROPRIETARY TO CNIT TECHNOLOGIES CO., LTD. AND SHALL NOT BE DUPLICATED USED RELEASED OR DISCLOSED WITHOUT EXPRESSING WRITTEN PERMISSION.

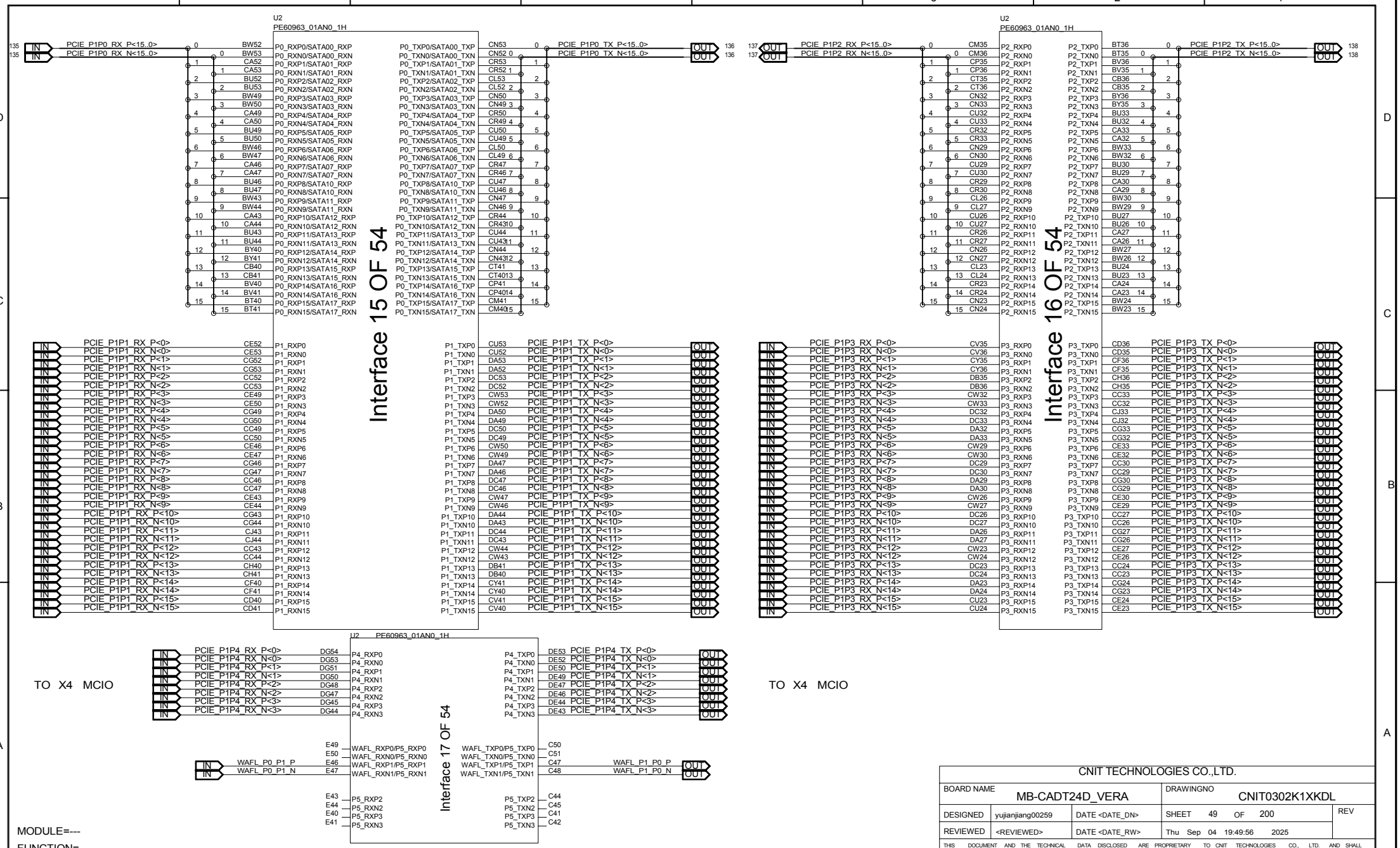
U2
PE60963_01AN0_1H
Interface 15 OF 54
PCIE_P1P0_RX_P<15..0>
PCIE_P1P0_RX_N<15..0>
PCIE_P1P0_TX_P<15..0>
PCIE_P1P0_TX_N<15..0>
Interface 16 OF 54
PCIE_P1P2_RX_P<15..0>
PCIE_P1P2_RX_N<15..0>
PCIE_P1P2_TX_P<15..0>
PCIE_P1P2_TX_N<15..0>
PCIE_P1P1_RX_P<0>
PCIE_P1P1_RX_N<0>
PCIE_P1P1_RX_P<1>
PCIE_P1P1_RX_N<1>
PCIE_P1P1_RX_P<2>
PCIE_P1P1_RX_N<2>
PCIE_P1P1_RX_P<3>
PCIE_P1P1_RX_N<3>
PCIE_P1P1_RX_P<4>
PCIE_P1P1_RX_N<4>
PCIE_P1P1_RX_P<5>
PCIE_P1P1_RX_N<5>
PCIE_P1P1_RX_P<6>
PCIE_P1P1_RX_N<6>
PCIE_P1P1_RX_P<7>
PCIE_P1P1_RX_N<7>
PCIE_P1P1_RX_P<8>
PCIE_P1P1_RX_N<8>
PCIE_P1P1_RX_P<9>
PCIE_P1P1_RX_N<9>
PCIE_P1P1_RX_P<10>
PCIE_P1P1_RX_N<10>
PCIE_P1P1_RX_P<11>
PCIE_P1P1_RX_N<11>
PCIE_P1P1_RX_P<12>
PCIE_P1P1_RX_N<12>
PCIE_P1P1_RX_P<13>
PCIE_P1P1_RX_N<13>
PCIE_P1P1_RX_P<14>
PCIE_P1P1_RX_N<14>
PCIE_P1P1_RX_P<15>
PCIE_P1P1_RX_N<15>
PCIE_P1P1_TX_P<0>
PCIE_P1P1_TX_N<0>
PCIE_P1P1_TX_P<1>
PCIE_P1P1_TX_N<1>
PCIE_P1P1_TX_P<2>
PCIE_P1P1_TX_N<2>
PCIE_P1P1_TX_P<3>
PCIE_P1P1_TX_N<3>
PCIE_P1P1_TX_P<4>
PCIE_P1P1_TX_N<4>
PCIE_P1P1_TX_P<5>
PCIE_P1P1_TX_N<5>
PCIE_P1P1_TX_P<6>
PCIE_P1P1_TX_N<6>
PCIE_P1P1_TX_P<7>
PCIE_P1P1_TX_N<7>
PCIE_P1P1_TX_P<8>
PCIE_P1P1_TX_N<8>
PCIE_P1P1_TX_P<9>
PCIE_P1P1_TX_N<9>
PCIE_P1P1_TX_P<10>
PCIE_P1P1_TX_N<10>
PCIE_P1P1_TX_P<11>
PCIE_P1P1_TX_N<11>
PCIE_P1P1_TX_P<12>
PCIE_P1P1_TX_N<12>
PCIE_P1P1_TX_P<13>
PCIE_P1P1_TX_N<13>
PCIE_P1P1_TX_P<14>
PCIE_P1P1_TX_N<14>
PCIE_P1P1_TX_P<15>
PCIE_P1P1_TX_N<15>
PCIE_P1P3_RX_P<0>
PCIE_P1P3_RX_N<0>
PCIE_P1P3_RX_P<1>
PCIE_P1P3_RX_N<1>
PCIE_P1P3_RX_P<2>
PCIE_P1P3_RX_N<2>
PCIE_P1P3_RX_P<3>
PCIE_P1P3_RX_N<3>
PCIE_P1P3_RX_P<4>
PCIE_P1P3_RX_N<4>
PCIE_P1P3_RX_P<5>
PCIE_P1P3_RX_N<5>
PCIE_P1P3_RX_P<6>
PCIE_P1P3_RX_N<6>
PCIE_P1P3_RX_P<7>
PCIE_P1P3_RX_N<7>
PCIE_P1P3_RX_P<8>
PCIE_P1P3_RX_N<8>
PCIE_P1P3_RX_P<9>
PCIE_P1P3_RX_N<9>
PCIE_P1P3_RX_P<10>
PCIE_P1P3_RX_N<10>
PCIE_P1P3_RX_P<11>
PCIE_P1P3_RX_N<11>
PCIE_P1P3_RX_P<12>
PCIE_P1P3_RX_N<12>
PCIE_P1P3_RX_P<13>
PCIE_P1P3_RX_N<13>
PCIE_P1P3_RX_P<14>
PCIE_P1P3_RX_N<14>
PCIE_P1P3_RX_P<15>
PCIE_P1P3_RX_N<15>
PCIE_P1P3_TX_P<0>
PCIE_P1P3_TX_N<0>
PCIE_P1P3_TX_P<1>
PCIE_P1P3_TX_N<1>
PCIE_P1P3_TX_P<2>
PCIE_P1P3_TX_N<2>
PCIE_P1P3_TX_P<3>
PCIE_P1P3_TX_N<3>
PCIE_P1P3_TX_P<4>
PCIE_P1P3_TX_N<4>
PCIE_P1P3_TX_P<5>
PCIE_P1P3_TX_N<5>
PCIE_P1P3_TX_P<6>
PCIE_P1P3_TX_N<6>
PCIE_P1P3_TX_P<7>
PCIE_P1P3_TX_N<7>
PCIE_P1P3_TX_P<8>
PCIE_P1P3_TX_N<8>
PCIE_P1P3_TX_P<9>
PCIE_P1P3_TX_N<9>
PCIE_P1P3_TX_P<10>
PCIE_P1P3_TX_N<10>
PCIE_P1P3_TX_P<11>
PCIE_P1P3_TX_N<11>
PCIE_P1P3_TX_P<12>
PCIE_P1P3_TX_N<12>
PCIE_P1P3_TX_P<13>
PCIE_P1P3_TX_N<13>
PCIE_P1P3_TX_P<14>
PCIE_P1P3_TX_N<14>
PCIE_P1P3_TX_P<15>
PCIE_P1P3_TX_N<15>
TO X4 MCIO
U2 PE60963_01AN0_1H
Interface 17 OF 54
PCIE_P1P4_RX_P<0>
PCIE_P1P4_RX_N<0>
PCIE_P1P4_RX_P<1>
PCIE_P1P4_RX_N<1>
PCIE_P1P4_RX_P<2>
PCIE_P1P4_RX_N<2>
PCIE_P1P4_RX_P<3>
PCIE_P1P4_RX_N<3>
PCIE_P1P4_TX_P<0>
PCIE_P1P4_TX_N<0>
PCIE_P1P4_TX_P<1>
PCIE_P1P4_TX_N<1>
PCIE_P1P4_TX_P<2>
PCIE_P1P4_TX_N<2>
PCIE_P1P4_TX_P<3>
PCIE_P1P4_TX_N<3>
WAFL_P0_P1_P
WAFL_P0_P1_N
WAFL_P1_P0_P
WAFL_P1_P0_N
TO X4 MCIO
MODULE=---
FUNCTION=---
CNIT TECHNOLOGIES CO.,LTD.
BOARD NAME
MB-CADT24D_VERA
DRAWINGNO
CNIT0302K1XKDL
DESIGNED
yujianjiang00259
DATE <DATE_DN>
SHEET 49 OF 200
REV
REVIEWED
<REVIEWED>
DATE <DATE_RW>
Thu Sep 04 19:49:56 2025
THIS DOCUMENT AND THE TECHNICAL DATA DISCLOSED ARE PROPRIETARY TO CNIT TECHNOLOGIES CO., LTD. AND SHALL NOT BE DUPLICATED USED RELEASED OR DISCLOSED WITHOUT EXPRESSING WRITTEN PERMISSION.

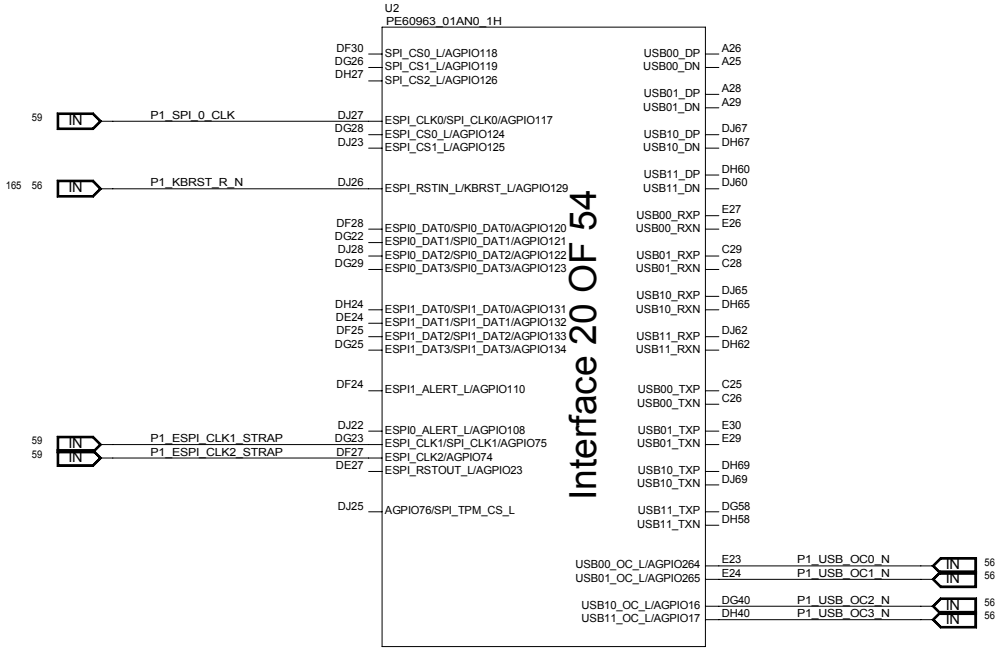

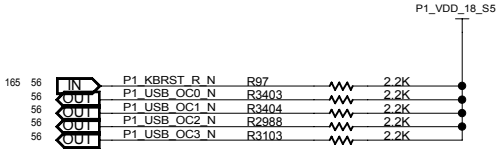

MODULE=---

FUNCTION=---

CNIT TECHNOLOGIES CO.,LTD.				
BOARD NAME MB-CADT24D_VERA			DRAWINGNO CNIT0302K1XKDL	
DESIGNED	yujianjiang00259	DATE <DATE_DN>	SHEET 50 OF 200	REV
REVIEWED	<REVIEWED>	DATE <DATE_RW>	Fri Aug 29 11:20:57 2025	

THIS DOCUMENT AND THE TECHNICAL DATA DISCLOSED ARE PROPRIETARY TO CNIT TECHNOLOGIES CO., LTD. AND SHALL NOT BE DUPLICATED USED RELEASED OR DISCLOSED WITHOUT EXPRESSING WRITTEN PERMISSION.

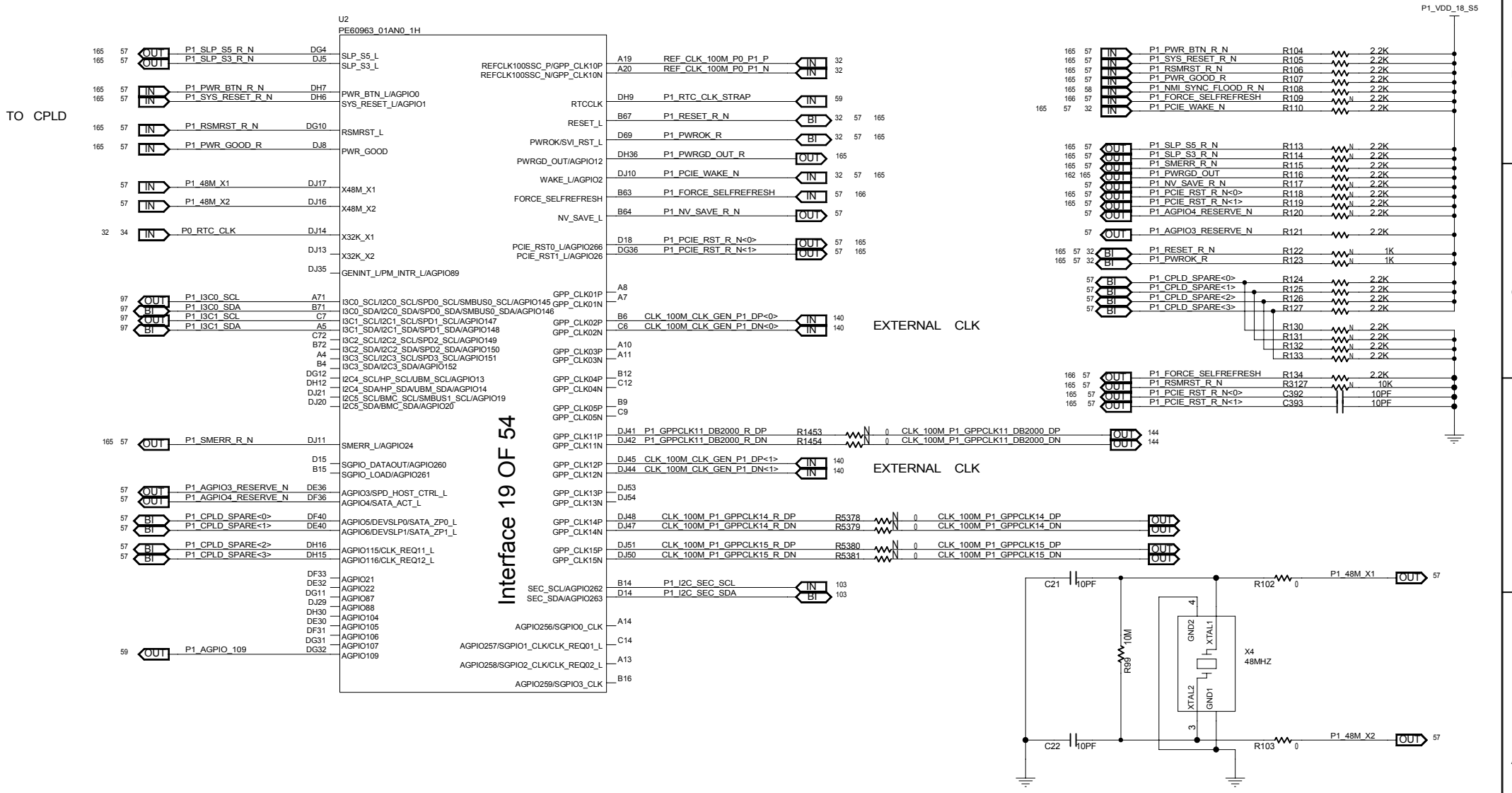

CNIT TECHNOLOGIES CO.,LTD.				
BOARD NAME MB-CADT24D_VERA			DRAWINGNO CNIT0302K1XKDL	
DESIGNED	yujianjiang00259	DATE <DATE_DN>	SHEET 51 OF 200	REV
REVIEWED	<REVIEWED>	DATE <DATE_RW>	Mon Sep 01 14:11:17 2025	

THIS DOCUMENT AND THE TECHNICAL DATA DISCLOSED ARE PROPRIETARY TO CNIT TECHNOLOGIES CO., LTD. AND SHALL NOT BE DUPLICATED USED RELEASED OR DISCLOSED WITHOUT EXPRESSING WRITTEN PERMISSION.

MODULE=---

FUNCTION=---

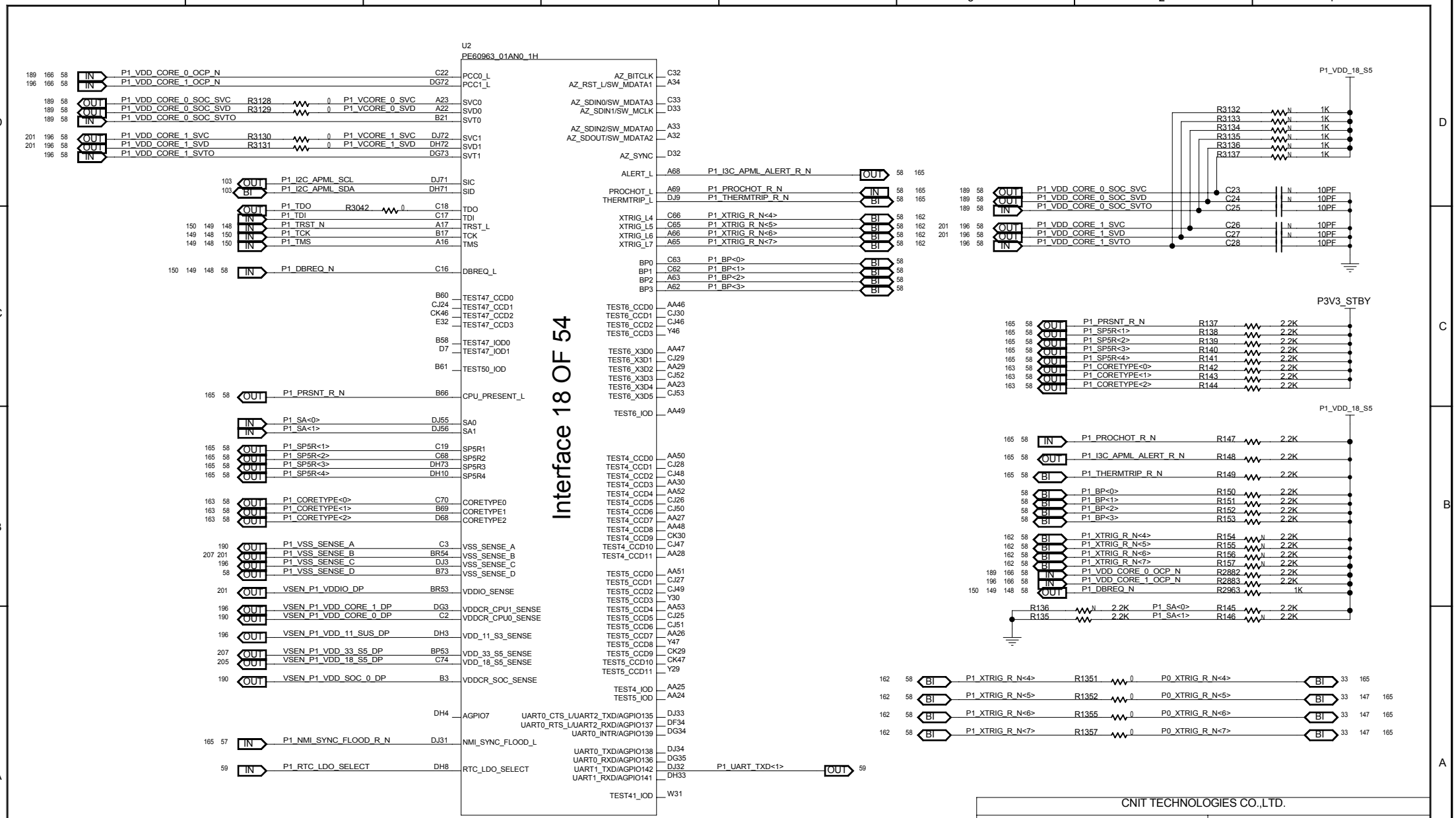
U2
PE60963_01AN0_1H
Interface 18 OF 54
P1_VDD_CORE_0_OCP_N C22 PCC0_L
P1_VDD_CORE_1_OCP_N DG72 PCC1_L
P1_VDD_CORE_0_SOC_SVC R3128 P1_VCORE_0_SVC A23 SVC0
P1_VDD_CORE_0_SOC_SVD R3129 P1_VCORE_0_SVD A22 SVD0
P1_VDD_CORE_0_SOC_SVTO B21 SVT0
P1_VDD_CORE_1_SVC R3130 P1_VCORE_1_SVC DJ72 SVC1
P1_VDD_CORE_1_SVD R3131 P1_VCORE_1_SVD DH72 SVD1
P1_VDD_CORE_1_SVTO DG73 SVT1
P1_I2C_APML_SCL DJ71 SIC
P1_I2C_APML_SDA DH71 SID
P1_TDO R3042 C18 TDO
P1_TDI C17 TDI
P1_TRST_N A17 TRST_L
P1_TCK B17 TCK
P1_TMS A16 TMS
P1_DBREQ_N C16 DBREQ_L
B60 TEST47_CCD0
CJ24 TEST47_CCD1
CK46 TEST47_CCD2
E32 TEST47_CCD3
B58 TEST47_IOD0
D7 TEST47_IOD1
B61 TEST50_IOD
P1_PRSNT_R_N B66 CPU_PRESENT_L
P1_SA<0> DJ55 SA0
P1_SA<1> DJ56 SA1
P1_SP5R<1> C19 SP5R1
P1_SP5R<2> C68 SP5R2
P1_SP5R<3> DH73 SP5R3
P1_SP5R<4> DH10 SP5R4
P1_CORETYPE<0> C70 CORETYPE0
P1_CORETYPE<1> B69 CORETYPE1
P1_CORETYPE<2> D68 CORETYPE2
P1_VSS_SENSE_A C3 VSS_SENSE_A
P1_VSS_SENSE_B BR54 VSS_SENSE_B
P1_VSS_SENSE_C DJ3 VSS_SENSE_C
P1_VSS_SENSE_D B73 VSS_SENSE_D
VSEN_P1_VDDIO_DP BR53 VDDIO_SENSE
VSEN_P1_VDD_CORE_1_DP DG3 VDDCR_CPU1_SENSE
VSEN_P1_VDD_CORE_0_DP C2 VDDCR_CPU0_SENSE
VSEN_P1_VDD_11_SUS_DP DH3 VDD_11_S3_SENSE
VSEN_P1_VDD_33_S5_DP BP53 VDD_33_S5_SENSE
VSEN_P1_VDD_18_S5_DP C74 VDD_18_S5_SENSE
VSEN_P1_VDD_SOC_0_DP B3 VDDCR_SOC_SENSE
DH4 AGPIO7
P1_NMI_SYNC_FLOOD_R_N DJ31 NMI_SYNC_FLOOD_L
P1_RTC_LDO_SELECT DH8 RTC_LDO_SELECT
AZ_BITCLK C32
AZ_RST_L/SW_MDATA1 A34
AZ_SDIN0/SW_MDATA3 C33
AZ_SDIN1/SW_MCLK D33
AZ_SDIN2/SW_MDATA0 A33
AZ_SDOUT/SW_MDATA2 A32
AZ_SYNC D32
ALERT_L A68 P1_I3C_APML_ALERT_R_N
PROCHOT_L A69 P1_PROCHOT_R_N
THERMTRIP_L DJ9 P1_THERMTRIP_R_N
XTRIG_L4 C66 P1_XTRIG_R_N<4>
XTRIG_L5 C65 P1_XTRIG_R_N<5>
XTRIG_L6 A66 P1_XTRIG_R_N<6>
XTRIG_L7 A65 P1_XTRIG_R_N<7>
BP0 C63 P1_BP<0>
BP1 C62 P1_BP<1>
BP2 A63 P1_BP<2>
BP3 A62 P1_BP<3>
TEST6_CCD0 AA46
TEST6_CCD1 CJ30
TEST6_CCD2 CJ46
TEST6_CCD3 Y46
TEST6_X3D0 AA47
TEST6_X3D1 CJ29
TEST6_X3D2 AA29
TEST6_X3D3 CJ52
TEST6_X3D4 AA23
TEST6_X3D5 CJ53
TEST6_IOD AA49
TEST4_CCD0 AA50
TEST4_CCD1 CJ28
TEST4_CCD2 CJ48
TEST4_CCD3 AA30
TEST4_CCD4 AA52
TEST4_CCD5 CJ26
TEST4_CCD6 CJ50
TEST4_CCD7 AA27
TEST4_CCD8 AA48
TEST4_CCD9 CK30
TEST4_CCD10 CJ47
TEST4_CCD11 AA28
TEST5_CCD0 AA51
TEST5_CCD1 CJ27
TEST5_CCD2 CJ49
TEST5_CCD3 Y30
TEST5_CCD4 AA53
TEST5_CCD5 CJ25
TEST5_CCD6 CJ51
TEST5_CCD7 AA26
TEST5_CCD8 Y47
TEST5_CCD9 CK29
TEST5_CCD10 CK47
TEST5_CCD11 Y29
TEST4_IOD AA25
TEST5_IOD AA24
UART0_CTS_L/UART2_TXD/AGPIO135 DJ33
UART0_RTS_L/UART2_RXD/AGPIO137 DF34
UART0_INTR/AGPIO139 DG34
UART0_TXD/AGPIO138 DJ34
UART0_RXD/AGPIO136 DG35
UART1_TXD/AGPIO142 DJ32 P1_UART_TXD<1>
UART1_RXD/AGPIO141 DH33
TEST41_IOD W31
P1_VDD_18_S5
R3132 1K
R3133 1K
R3134 1K
R3135 1K
R3136 1K
R3137 1K
P1_VDD_CORE_0_SOC_SVC C23 10PF
P1_VDD_CORE_0_SOC_SVD C24 10PF
P1_VDD_CORE_0_SOC_SVTO C25 10PF
P1_VDD_CORE_1_SVC C26 10PF
P1_VDD_CORE_1_SVD C27 10PF
P1_VDD_CORE_1_SVTO C28 10PF
P3V3_STBY
P1_PRSNT_R_N R137 2.2K
P1_SP5R<1> R138 2.2K
P1_SP5R<2> R139 2.2K
P1_SP5R<3> R140 2.2K
P1_SP5R<4> R141 2.2K
P1_CORETYPE<0> R142 2.2K
P1_CORETYPE<1> R143 2.2K
P1_CORETYPE<2> R144 2.2K
P1_VDD_18_S5
P1_PROCHOT_R_N R147 2.2K
P1_I3C_APML_ALERT_R_N R148 2.2K
P1_THERMTRIP_R_N R149 2.2K
P1_BP<0> R150 2.2K
P1_BP<1> R151 2.2K
P1_BP<2> R152 2.2K
P1_BP<3> R153 2.2K
P1_XTRIG_R_N<4> R154 2.2K
P1_XTRIG_R_N<5> R155 2.2K
P1_XTRIG_R_N<6> R156 2.2K
P1_XTRIG_R_N<7> R157 2.2K
P1_VDD_CORE_0_OCP_N R2882 2.2K
P1_VDD_CORE_1_OCP_N R2883 2.2K
P1_DBREQ_N R2963 1K
R136 2.2K P1_SA<0> R145 2.2K
R135 2.2K P1_SA<1> R146 2.2K
P1_XTRIG_R_N<4> R1351 P0_XTRIG_R_N<4>
P1_XTRIG_R_N<5> R1352 P0_XTRIG_R_N<5>
P1_XTRIG_R_N<6> R1355 P0_XTRIG_R_N<6>
P1_XTRIG_R_N<7> R1357 P0_XTRIG_R_N<7>
MODULE=---
FUNCTION=---
CNIT TECHNOLOGIES CO.,LTD.
BOARD NAME MB-CADT24D_VERA
DRAWINGNO CNIT0302K1XKDL
DESIGNED yujianjiang00259 DATE <DATE_DN>
SHEET 52 OF 200
REV
REVIEWED <REVIEWED> DATE <DATE_RW>
Sat Sep 13 14:27:31 2025
THIS DOCUMENT AND THE TECHNICAL DATA DISCLOSED ARE PROPRIETARY TO CNIT TECHNOLOGIES CO., LTD. AND SHALL NOT BE DUPLICATED USED RELEASED OR DISCLOSED WITHOUT EXPRESSING WRITTEN PERMISSION.

PIN NAME	INTERNAL PU/PD	CPU0(DEFAULT)	CPU1(DEFAULT)	DESCRIPTION
ESPI_CLK0/SPI_CLK0/AGPIO117	PD	0	0	CLKGEN SELECTION 0: EXTERNAL CLKGEN MODE 1: INTERNAL CLKGEN MODE
UART1_TXD/AGPIO142 AGPIO109	PU PU	0 1	0 0	ROMTYPE[1:0] 01: SPI ROM 00: RSVD 1X: ESPI
ESPI_CLK1/SPI_CLK1/AGPIO75	PD	0	0	ALTERNATE IMAGE 0: TOP HALF 64MB ROM 1: BOTTOM HALF 64MB ROM
RTCCLK	PD	0	0	BYPASS RTC 0: NORMAL MODE, 32KHZ XTAL AS SOURCE 1: RTCCLK IS INPUT & USED AS BYPASS CLK
ESPI_CLK2/AGPIO74	PD	0	0	RSVD

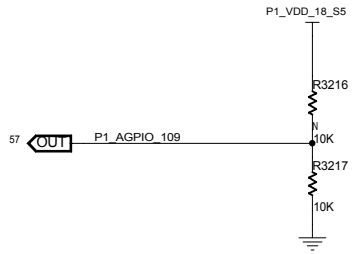

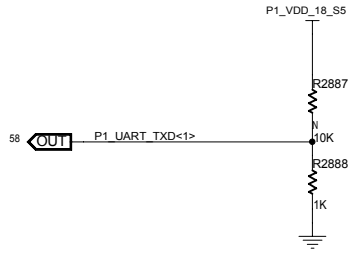

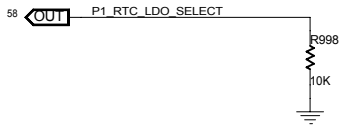

HIGH = VDDBT_RTC_G POWERED FROM 3.0V SOURCE
LOW = VDDBT_RTC_G POWERED FROM 1.8 OR 1.5V SOURCE (DEFAULT)

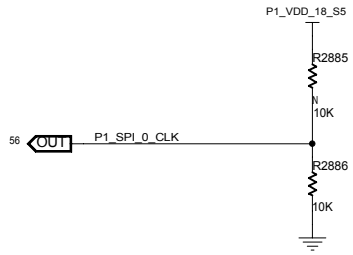

HIGH = INT CLK GEN
LOW = EXT CLK GEN (DEFAULT)

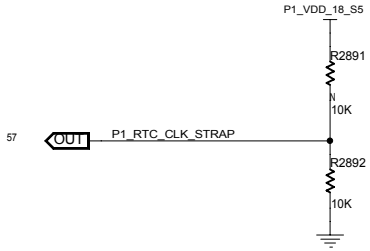

HIGH = RSVD
LOW = USE 32KHZ XTAL (DEFAULT)

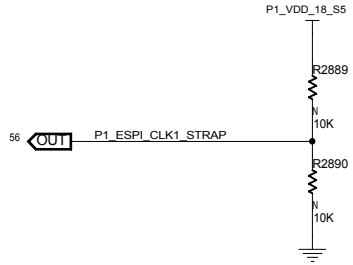

HIGH = BOOT FROM ALTERNATE FW IMAGE
LOW = DEFAULT

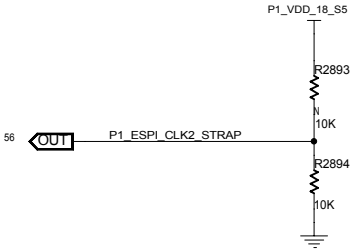

HIGH = RSVD
LOW = DEFAULT

MODULE=---
FUNCTION=---

CNIT TECHNOLOGIES CO.,LTD.				
BOARD NAME MB-CADT24D_VERA			DRAWINGNO CNIT0302K1XKDL	
DESIGNED	yujianjiang00259	DATE <DATE_DN>	SHEET 53 OF 200	REV
REVIEWED	<REVIEWED>	DATE <DATE_RW>	Mon Sep 01 14:11:21 2025	

THIS DOCUMENT AND THE TECHNICAL DATA DISCLOSED ARE PROPRIETARY TO CNIT TECHNOLOGIES CO., LTD. AND SHALL NOT BE DUPLICATED USED RELEASED OR DISCLOSED WITHOUT EXPRESSING WRITTEN PERMISSION.

P1_VDD_CORE_0 P1_VDD_CORE_0

U2
PE60963_01AN0_1H

Interface 23 OF 54

W43	VDDCR_CPU0_117	VDDCR_CPU0_176	AK47
W44	VDDCR_CPU0_118	VDDCR_CPU0_177	AK49
W46	VDDCR_CPU0_119	VDDCR_CPU0_178	AK50
W47	VDDCR_CPU0_120	VDDCR_CPU0_179	AK52
Y35	VDDCR_CPU0_121	VDDCR_CPU0_180	AK53
Y36	VDDCR_CPU0_122	VDDCR_CPU0_181	AL35
Y40	VDDCR_CPU0_123	VDDCR_CPU0_182	AL36
Y41	VDDCR_CPU0_124	VDDCR_CPU0_183	AL40
AB23	VDDCR_CPU0_125	VDDCR_CPU0_184	AL41
AB24	VDDCR_CPU0_126	VDDCR_CPU0_185	AP23
AB26	VDDCR_CPU0_127	VDDCR_CPU0_186	AP24
AB27	VDDCR_CPU0_128	VDDCR_CPU0_187	AP26
AB29	VDDCR_CPU0_129	VDDCR_CPU0_188	AP27
AB30	VDDCR_CPU0_130	VDDCR_CPU0_189	AP29
AB32	VDDCR_CPU0_131	VDDCR_CPU0_190	AP30
AB33	VDDCR_CPU0_132	VDDCR_CPU0_191	AP32
AB43	VDDCR_CPU0_133	VDDCR_CPU0_192	AP33
AB44	VDDCR_CPU0_134	VDDCR_CPU0_193	AP43
AB46	VDDCR_CPU0_135	VDDCR_CPU0_194	AP44
AB47	VDDCR_CPU0_136	VDDCR_CPU0_195	AP46
AB49	VDDCR_CPU0_137	VDDCR_CPU0_196	AP47
AB50	VDDCR_CPU0_138	VDDCR_CPU0_197	AP49
AB52	VDDCR_CPU0_139	VDDCR_CPU0_198	AP50
AB53	VDDCR_CPU0_140	VDDCR_CPU0_199	AP52
AC35	VDDCR_CPU0_141	VDDCR_CPU0_200	AP53
AC36	VDDCR_CPU0_142	VDDCR_CPU0_201	AR23
AC40	VDDCR_CPU0_143	VDDCR_CPU0_202	AR25
AC41	VDDCR_CPU0_144	VDDCR_CPU0_203	AR27
AF23	VDDCR_CPU0_145	VDDCR_CPU0_204	AR29
AF24	VDDCR_CPU0_146	VDDCR_CPU0_205	AR31
AF26	VDDCR_CPU0_147	VDDCR_CPU0_206	AR33
AF27	VDDCR_CPU0_148	VDDCR_CPU0_207	AR35
AF29	VDDCR_CPU0_149	VDDCR_CPU0_208	AR40
AF30	VDDCR_CPU0_150	VDDCR_CPU0_209	AR42
AF32	VDDCR_CPU0_151	VDDCR_CPU0_210	AR44
AF33	VDDCR_CPU0_152	VDDCR_CPU0_211	AR46
AF43	VDDCR_CPU0_153	VDDCR_CPU0_212	AR48
AF44	VDDCR_CPU0_154	VDDCR_CPU0_213	AR50
AF46	VDDCR_CPU0_155	VDDCR_CPU0_214	AT24
AF47	VDDCR_CPU0_156	VDDCR_CPU0_215	AT26
AF49	VDDCR_CPU0_157	VDDCR_CPU0_216	AT28
AF50	VDDCR_CPU0_158	VDDCR_CPU0_217	AT30
AF52	VDDCR_CPU0_159	VDDCR_CPU0_218	AT32
AF53	VDDCR_CPU0_160	VDDCR_CPU0_219	AT34
AG35	VDDCR_CPU0_161	VDDCR_CPU0_220	AT36
AG36	VDDCR_CPU0_162	VDDCR_CPU0_221	AT39
AG40	VDDCR_CPU0_163	VDDCR_CPU0_222	AT41
AG41	VDDCR_CPU0_164	VDDCR_CPU0_223	AT43
AK23	VDDCR_CPU0_165	VDDCR_CPU0_224	AT45
AK24	VDDCR_CPU0_166	VDDCR_CPU0_225	AT47
AK26	VDDCR_CPU0_167	VDDCR_CPU0_226	AT49
AK27	VDDCR_CPU0_168	VDDCR_CPU0_227	AU25
AK29	VDDCR_CPU0_169	VDDCR_CPU0_228	AU29
AK30	VDDCR_CPU0_170	VDDCR_CPU0_229	AU33
AK32	VDDCR_CPU0_171	VDDCR_CPU0_230	AU42
AK33	VDDCR_CPU0_172	VDDCR_CPU0_231	AU44
AK43	VDDCR_CPU0_173	VDDCR_CPU0_232	AU46
AK44	VDDCR_CPU0_174	VDDCR_CPU0_233	AU48
AK46	VDDCR_CPU0_175		

P1_VDD_CORE_0 P1_VDD_CORE_0

U2
PE60963_01AN0_1H

Interface 22 OF 54

B19	VDDCR_CPU0_1	VDDCR_CPU0_59	H32
B20	VDDCR_CPU0_2	VDDCR_CPU0_60	H33
B22	VDDCR_CPU0_3	VDDCR_CPU0_61	H43
B23	VDDCR_CPU0_4	VDDCR_CPU0_62	H44
B25	VDDCR_CPU0_5	VDDCR_CPU0_63	H46
B26	VDDCR_CPU0_6	VDDCR_CPU0_64	H47
B28	VDDCR_CPU0_7	VDDCR_CPU0_65	H49
B29	VDDCR_CPU0_8	VDDCR_CPU0_66	H50
B31	VDDCR_CPU0_9	VDDCR_CPU0_67	H52
B32	VDDCR_CPU0_10	VDDCR_CPU0_68	H53
B34	VDDCR_CPU0_11	VDDCR_CPU0_69	J35
B35	VDDCR_CPU0_12	VDDCR_CPU0_70	J36
B41	VDDCR_CPU0_13	VDDCR_CPU0_71	J40
B42	VDDCR_CPU0_14	VDDCR_CPU0_72	J41
B44	VDDCR_CPU0_15	VDDCR_CPU0_73	M23
B45	VDDCR_CPU0_16	VDDCR_CPU0_74	M24
B47	VDDCR_CPU0_17	VDDCR_CPU0_75	M26
B48	VDDCR_CPU0_18	VDDCR_CPU0_76	M27
B50	VDDCR_CPU0_19	VDDCR_CPU0_77	M29
B51	VDDCR_CPU0_20	VDDCR_CPU0_78	M30
B53	VDDCR_CPU0_21	VDDCR_CPU0_79	M32
B54	VDDCR_CPU0_22	VDDCR_CPU0_80	M33
B56	VDDCR_CPU0_23	VDDCR_CPU0_81	M43
B57	VDDCR_CPU0_24	VDDCR_CPU0_82	M44
C20	VDDCR_CPU0_25	VDDCR_CPU0_83	M46
D55	VDDCR_CPU0_26	VDDCR_CPU0_84	M47
D56	VDDCR_CPU0_27	VDDCR_CPU0_85	M49
E22	VDDCR_CPU0_28	VDDCR_CPU0_86	M50
E25	VDDCR_CPU0_29	VDDCR_CPU0_87	M52
E28	VDDCR_CPU0_30	VDDCR_CPU0_88	M53
E31	VDDCR_CPU0_31	VDDCR_CPU0_89	N35
E34	VDDCR_CPU0_32	VDDCR_CPU0_90	N36
E35	VDDCR_CPU0_33	VDDCR_CPU0_91	N40
E42	VDDCR_CPU0_34	VDDCR_CPU0_92	N41
E45	VDDCR_CPU0_35	VDDCR_CPU0_93	T23
E48	VDDCR_CPU0_36	VDDCR_CPU0_94	T24
E51	VDDCR_CPU0_37	VDDCR_CPU0_95	T26
E54	VDDCR_CPU0_38	VDDCR_CPU0_96	T27
F22	VDDCR_CPU0_39	VDDCR_CPU0_97	T29
F25	VDDCR_CPU0_40	VDDCR_CPU0_98	T30
F28	VDDCR_CPU0_41	VDDCR_CPU0_99	T32
F31	VDDCR_CPU0_42	VDDCR_CPU0_100	T33
F34	VDDCR_CPU0_43	VDDCR_CPU0_101	T43
F42	VDDCR_CPU0_44	VDDCR_CPU0_102	T44
F45	VDDCR_CPU0_45	VDDCR_CPU0_103	T46
F48	VDDCR_CPU0_46	VDDCR_CPU0_104	T47
F51	VDDCR_CPU0_47	VDDCR_CPU0_105	T49
F54	VDDCR_CPU0_48	VDDCR_CPU0_106	T50
G35	VDDCR_CPU0_49	VDDCR_CPU0_107	T52
G36	VDDCR_CPU0_50	VDDCR_CPU0_108	T53
G40	VDDCR_CPU0_51	VDDCR_CPU0_109	U35
G41	VDDCR_CPU0_52	VDDCR_CPU0_110	U36
H23	VDDCR_CPU0_53	VDDCR_CPU0_111	U40
H24	VDDCR_CPU0_54	VDDCR_CPU0_112	U41
H26	VDDCR_CPU0_55	VDDCR_CPU0_113	W29
H27	VDDCR_CPU0_56	VDDCR_CPU0_114	W30
H29	VDDCR_CPU0_57	VDDCR_CPU0_115	W32
H30	VDDCR_CPU0_58	VDDCR_CPU0_116	W33

P1_VDD_CORE_1 P1_VDD_CORE_1

U2
PE60963_01AN0_1H

Interface 24 OF 54

BN31	VDDCR_CPU1_2	VDDCR_CPU1_62	BY43
BN42	VDDCR_CPU1_4	VDDCR_CPU1_63	BY44
BN50	VDDCR_CPU1_6	VDDCR_CPU1_64	BY46
BP26	VDDCR_CPU1_8	VDDCR_CPU1_65	BY47
BP30	VDDCR_CPU1_10	VDDCR_CPU1_66	BY49
BP34	VDDCR_CPU1_12	VDDCR_CPU1_67	BY50
BP36	VDDCR_CPU1_13	VDDCR_CPU1_68	BY52
BP39	VDDCR_CPU1_14	VDDCR_CPU1_69	BY53
BP41	VDDCR_CPU1_15	VDDCR_CPU1_70	CC35
BP43	VDDCR_CPU1_16	VDDCR_CPU1_71	CC36
BP45	VDDCR_CPU1_17	VDDCR_CPU1_72	CC40
BP47	VDDCR_CPU1_18	VDDCR_CPU1_73	CC41
BP49	VDDCR_CPU1_19	VDDCR_CPU1_74	CD23
BR23	VDDCR_CPU1_20	VDDCR_CPU1_75	CD24
BR25	VDDCR_CPU1_21	VDDCR_CPU1_76	CD26
BR27	VDDCR_CPU1_22	VDDCR_CPU1_77	CD27
BR29	VDDCR_CPU1_23	VDDCR_CPU1_78	CD29
BR31	VDDCR_CPU1_24	VDDCR_CPU1_79	CD30
BR33	VDDCR_CPU1_25	VDDCR_CPU1_80	CD32
BR35	VDDCR_CPU1_26	VDDCR_CPU1_81	CD33
BR40	VDDCR_CPU1_27	VDDCR_CPU1_82	CD43
BR42	VDDCR_CPU1_28	VDDCR_CPU1_83	CD44
BR44	VDDCR_CPU1_29	VDDCR_CPU1_84	CD46
BR46	VDDCR_CPU1_30	VDDCR_CPU1_85	CD47
BR48	VDDCR_CPU1_31	VDDCR_CPU1_86	CD49
BR50	VDDCR_CPU1_32	VDDCR_CPU1_87	CD50
BR52	VDDCR_CPU1_33	VDDCR_CPU1_88	CD52
BT23	VDDCR_CPU1_34	VDDCR_CPU1_89	CD53
BT24	VDDCR_CPU1_35	VDDCR_CPU1_90	CG35
BT26	VDDCR_CPU1_36	VDDCR_CPU1_91	CG36
BT27	VDDCR_CPU1_37	VDDCR_CPU1_92	CG40
BT29	VDDCR_CPU1_38	VDDCR_CPU1_93	CG41
BT30	VDDCR_CPU1_39	VDDCR_CPU1_94	CH23
BT32	VDDCR_CPU1_40	VDDCR_CPU1_95	CH24
BT33	VDDCR_CPU1_41	VDDCR_CPU1_96	CH26
BT43	VDDCR_CPU1_42	VDDCR_CPU1_97	CH27
BT44	VDDCR_CPU1_43	VDDCR_CPU1_98	CH29
BT46	VDDCR_CPU1_44	VDDCR_CPU1_99	CH30
BT47	VDDCR_CPU1_45	VDDCR_CPU1_100	CH32
BT49	VDDCR_CPU1_46	VDDCR_CPU1_101	CH33
BT50	VDDCR_CPU1_47	VDDCR_CPU1_102	CH43
BT52	VDDCR_CPU1_48	VDDCR_CPU1_103	CH44
BT53	VDDCR_CPU1_49	VDDCR_CPU1_104	CH46
BW35	VDDCR_CPU1_50	VDDCR_CPU1_105	CH47
BW36	VDDCR_CPU1_51	VDDCR_CPU1_106	CH49
BW40	VDDCR_CPU1_52	VDDCR_CPU1_107	CH50
BW41	VDDCR_CPU1_53	VDDCR_CPU1_108	CH52
BY23	VDDCR_CPU1_54	VDDCR_CPU1_109	CH53
BY24	VDDCR_CPU1_55	VDDCR_CPU1_110	CK35
BY26	VDDCR_CPU1_56	VDDCR_CPU1_111	CK36
BY27	VDDCR_CPU1_57	VDDCR_CPU1_112	CK40
BY29	VDDCR_CPU1_58	VDDCR_CPU1_113	CK41
BY30	VDDCR_CPU1_59	VDDCR_CPU1_114	CL29
BY32	VDDCR_CPU1_60	VDDCR_CPU1_115	CL30
BY33	VDDCR_CPU1_61		

P1_VDD_CORE_1 P1_VDD_CORE_1

U2
PE60963_01AN0_1H

Interface 25 OF 54

CL32	VDDCR_CPU1_116	VDDCR_CPU1_178	DB49
CL33	VDDCR_CPU1_117	VDDCR_CPU1_179	DB50
CL43	VDDCR_CPU1_118	VDDCR_CPU1_180	DB52
CL44	VDDCR_CPU1_119	VDDCR_CPU1_181	DB53
CL46	VDDCR_CPU1_120	VDDCR_CPU1_182	DC35
CL47	VDDCR_CPU1_121	VDDCR_CPU1_183	DC36
CN35	VDDCR_CPU1_122	VDDCR_CPU1_184	DC40
CN36	VDDCR_CPU1_123	VDDCR_CPU1_185	DC41
CN40	VDDCR_CPU1_124	VDDCR_CPU1_186	DD22
CN41	VDDCR_CPU1_125	VDDCR_CPU1_187	DD25
CP23	VDDCR_CPU1_126	VDDCR_CPU1_188	DD28
CP24	VDDCR_CPU1_127	VDDCR_CPU1_189	DD31
CP26	VDDCR_CPU1_128	VDDCR_CPU1_190	DD34
CP27	VDDCR_CPU1_129	VDDCR_CPU1_191	DD42
CP29	VDDCR_CPU1_130	VDDCR_CPU1_192	DD45
CP30	VDDCR_CPU1_131	VDDCR_CPU1_193	DD48
CP32	VDDCR_CPU1_132	VDDCR_CPU1_194	DD51
CP33	VDDCR_CPU1_133	VDDCR_CPU1_195	DD54
CP43	VDDCR_CPU1_134	VDDCR_CPU1_196	DE22
CP44	VDDCR_CPU1_135	VDDCR_CPU1_197	DE25
CP46	VDDCR_CPU1_136	VDDCR_CPU1_198	DE28
CP47	VDDCR_CPU1_137	VDDCR_CPU1_199	DE31
CP49	VDDCR_CPU1_138	VDDCR_CPU1_200	DE34
CP50	VDDCR_CPU1_139	VDDCR_CPU1_201	DE35
CP52	VDDCR_CPU1_140	VDDCR_CPU1_202	DE41
CP53	VDDCR_CPU1_141	VDDCR_CPU1_203	DE42
CU35	VDDCR_CPU1_142	VDDCR_CPU1_204	DE45
CU36	VDDCR_CPU1_143	VDDCR_CPU1_205	DE48
CU40	VDDCR_CPU1_144	VDDCR_CPU1_206	DE51
CU41	VDDCR_CPU1_145	VDDCR_CPU1_207	DE54
CV23	VDDCR_CPU1_146	VDDCR_CPU1_208	DG19
CV24	VDDCR_CPU1_147	VDDCR_CPU1_209	DG57
CV26	VDDCR_CPU1_148	VDDCR_CPU1_210	DH19
CV27	VDDCR_CPU1_149	VDDCR_CPU1_211	DH20
CV29	VDDCR_CPU1_150	VDDCR_CPU1_212	DH22
CV30	VDDCR_CPU1_151	VDDCR_CPU1_213	DH23
CV32	VDDCR_CPU1_152	VDDCR_CPU1_214	DH25
CV33	VDDCR_CPU1_153	VDDCR_CPU1_215	DH26
CV43	VDDCR_CPU1_154	VDDCR_CPU1_216	DH28
CV44	VDDCR_CPU1_155	VDDCR_CPU1_217	DH29
CV46	VDDCR_CPU1_156	VDDCR_CPU1_218	DH31
CV47	VDDCR_CPU1_157	VDDCR_CPU1_219	DH32
CV49	VDDCR_CPU1_158	VDDCR_CPU1_220	DH34
CV50	VDDCR_CPU1_159	VDDCR_CPU1_221	DH35
CV52	VDDCR_CPU1_160	VDDCR_CPU1_222	DH41
CV53	VDDCR_CPU1_161	VDDCR_CPU1_223	DH42
DA35	VDDCR_CPU1_162	VDDCR_CPU1_224	DH44
DA36	VDDCR_CPU1_163	VDDCR_CPU1_225	DH45
DA40	VDDCR_CPU1_164	VDDCR_CPU1_226	DH47
DA41	VDDCR_CPU1_165	VDDCR_CPU1_227	DH48
DB23	VDDCR_CPU1_166	VDDCR_CPU1_228	DH50
DB24	VDDCR_CPU1_167	VDDCR_CPU1_229	DH51
DB26	VDDCR_CPU1_168	VDDCR_CPU1_230	DH53
DB27	VDDCR_CPU1_169	VDDCR_CPU1_231	DH54
DB29	VDDCR_CPU1_170	VDDCR_CPU1_232	DH56
DB30	VDDCR_CPU1_171	VDDCR_CPU1_233	DH57
DB32	VDDCR_CPU1_172	VDDCR_CPU1_1	BN27
DB33	VDDCR_CPU1_173	VDDCR_CPU1_3	BN35
DB43	VDDCR_CPU1_174	VDDCR_CPU1_5	BN46
DB44	VDDCR_CPU1_175	VDDCR_CPU1_7	BP24
DB46	VDDCR_CPU1_176	VDDCR_CPU1_9	BP28
DB47	VDDCR_CPU1_177	VDDCR_CPU1_11	BP32

MODULE=---

FUNCTION=---

CNIT TECHNOLOGIES CO.,LTD.				
BOARD NAME	MB-CADT24D_VERA		DRAWINGNO	CNIT0302K1XKDL
DESIGNED	yujianjiang00259	DATE <DATE_DN>	SHEET 54 OF 200	REV
REVIEWED	<REVIEWED>	DATE <DATE_RW>	Fri Aug 29 11:20:59 2025	

THIS DOCUMENT AND THE TECHNICAL DATA DISCLOSED ARE PROPRIETARY TO CNIT TECHNOLOGIES CO., LTD. AND SHALL NOT BE DUPLICATED USED RELEASED OR DISCLOSED WITHOUT EXPRESSING WRITTEN PERMISSION.

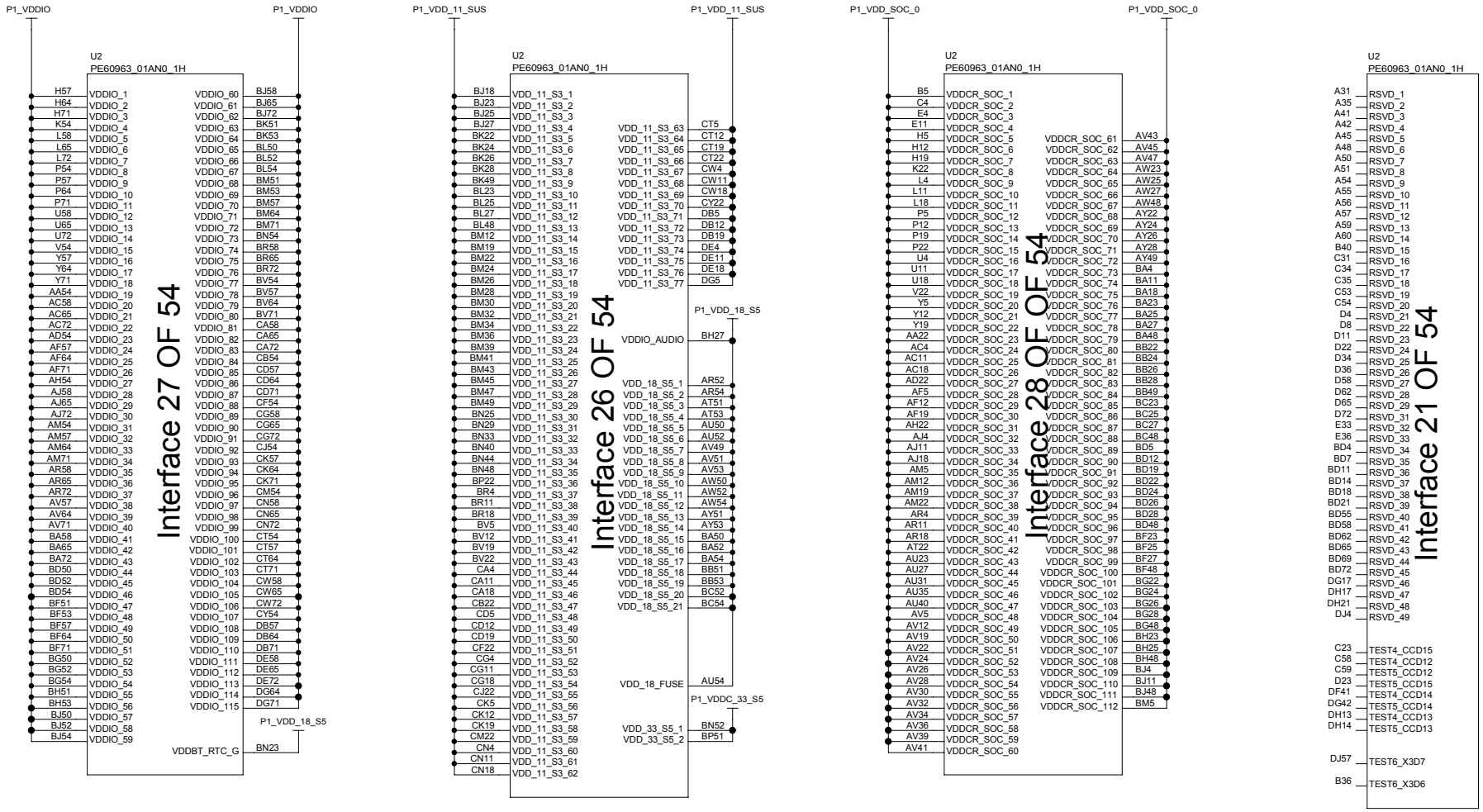

MODULE=---

FUNCTION=---

CNIT TECHNOLOGIES CO.,LTD.				
BOARD NAME MB-CADT24D_VERA			DRAWINGNO CNIT0302K1XKDL	
DESIGNED	yujianjiang00259	DATE <DATE_DN>	SHEET 55 OF 200	REV
REVIEWED	<REVIEWED>	DATE <DATE_RW>	Fri Aug 29 11:20:59 2025	

THIS DOCUMENT AND THE TECHNICAL DATA DISCLOSED ARE PROPRIETARY TO CNIT TECHNOLOGIES CO., LTD. AND SHALL NOT BE DUPLICATED USED RELEASED OR DISCLOSED WITHOUT EXPRESSING WRITTEN PERMISSION.

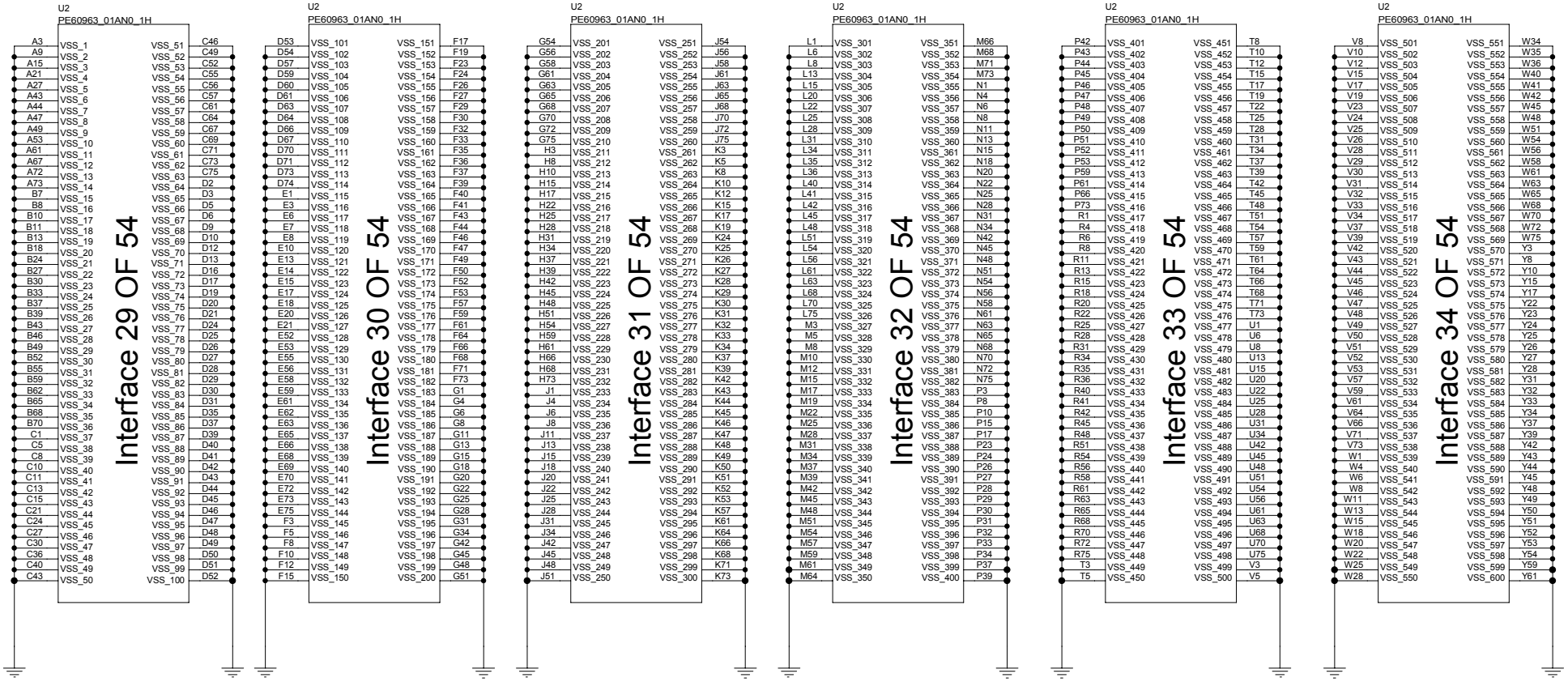

MODULE=---

FUNCTION=---

CNIT TECHNOLOGIES CO.,LTD.				
BOARD NAME MB-CADT24D_VERA			DRAWINGNO CNIT0302K1XKDL	
DESIGNED	yujianjiang00259	DATE <DATE_DN>	SHEET 56 OF 200	REV
REVIEWED	<REVIEWED>	DATE <DATE_RW>	Fri Aug 29 11:21:00 2025	

THIS DOCUMENT AND THE TECHNICAL DATA DISCLOSED ARE PROPRIETARY TO CNIT TECHNOLOGIES CO., LTD. AND SHALL NOT BE DUPLICATED USED RELEASED OR DISCLOSED WITHOUT EXPRESSING WRITTEN PERMISSION.

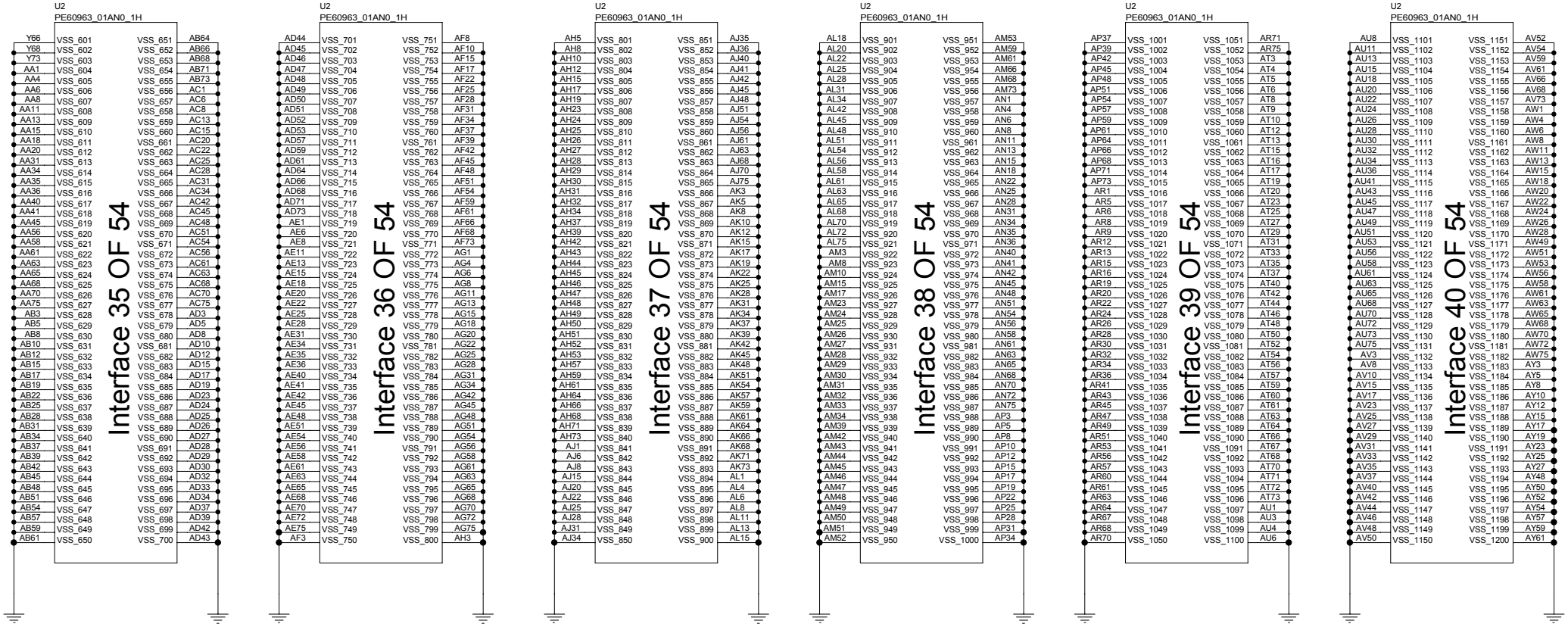

MODULE=---

FUNCTION=---

CNIT TECHNOLOGIES CO.,LTD.				
BOARD NAME MB-CADT24D_VERA			DRAWINGNO CNIT0302K1XKDL	
DESIGNED	yujianjiang00259	DATE <DATE_DN>	SHEET 57 OF 200	REV
REVIEWED	<REVIEWED>	DATE <DATE_RW>	Fri Aug 29 11:21:01 2025	

THIS DOCUMENT AND THE TECHNICAL DATA DISCLOSED ARE PROPRIETARY TO CNIT TECHNOLOGIES CO., LTD. AND SHALL NOT BE DUPLICATED USED RELEASED OR DISCLOSED WITHOUT EXPRESSING WRITTEN PERMISSION.

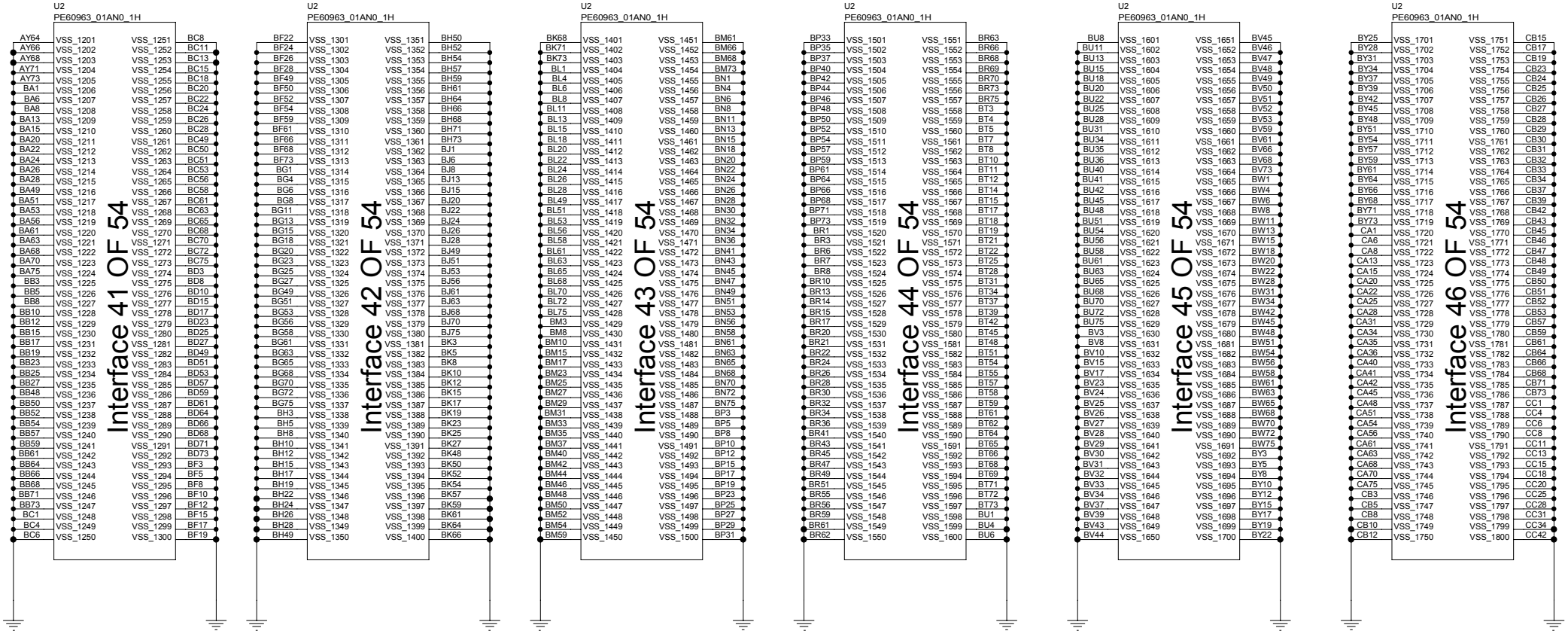

MODULE=---

FUNCTION=---

CNIT TECHNOLOGIES CO.,LTD.				
BOARD NAME MB-CADT24D_VERA			DRAWINGNO CNIT0302K1XKDL	
DESIGNED	yujianjiang00259	DATE <DATE_DN>	SHEET 58 OF 200	REV
REVIEWED	<REVIEWED>	DATE <DATE_RW>	Fri Aug 29 11:21:01 2025	

THIS DOCUMENT AND THE TECHNICAL DATA DISCLOSED ARE PROPRIETARY TO CNIT TECHNOLOGIES CO., LTD. AND SHALL NOT BE DUPLICATED USED RELEASED OR DISCLOSED WITHOUT EXPRESSING WRITTEN PERMISSION.

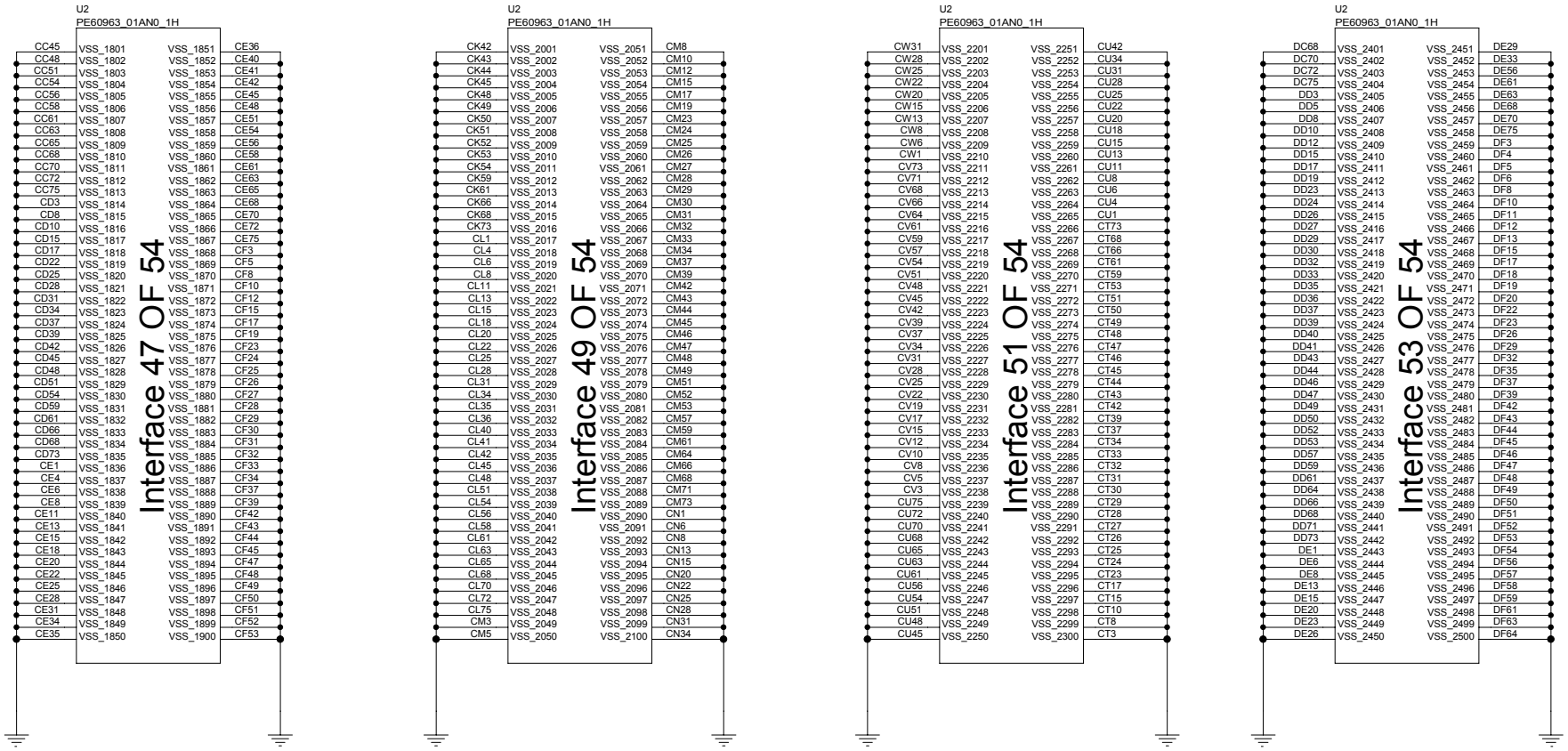

MODULE=---

FUNCTION=---

CNIT TECHNOLOGIES CO.,LTD.				
BOARD NAME MB-CADT24D_VERA			DRAWINGNO CNIT0302K1XKDL	
DESIGNED	yujianjiang00259	DATE <DATE_DN>	SHEET 59 OF 200	REV
REVIEWED	<REVIEWED>	DATE <DATE_RW>	Fri Aug 29 11:21:02 2025	

THIS DOCUMENT AND THE TECHNICAL DATA DISCLOSED ARE PROPRIETARY TO CNIT TECHNOLOGIES CO., LTD. AND SHALL NOT BE DUPLICATED USED RELEASED OR DISCLOSED WITHOUT EXPRESSING WRITTEN PERMISSION.

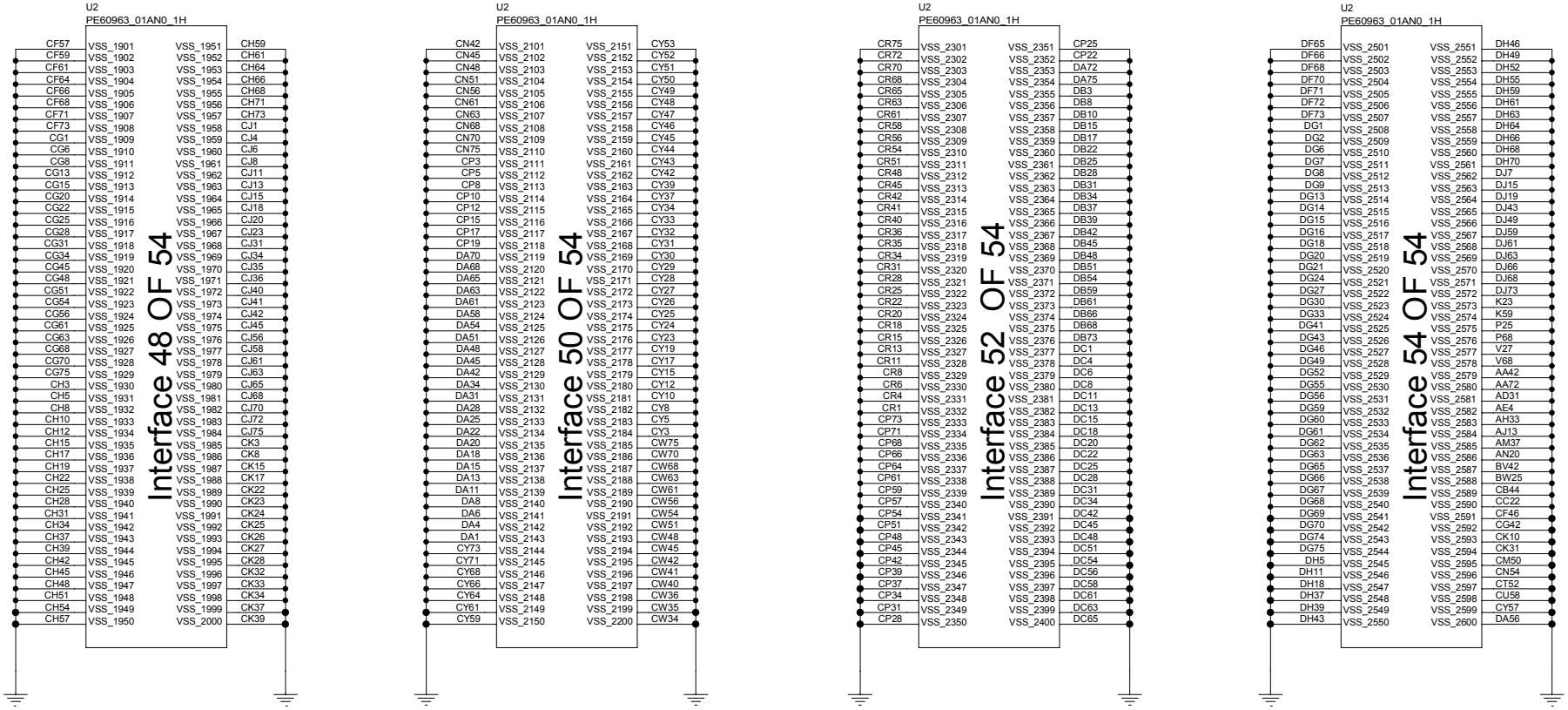

MODULE=---

FUNCTION=---

CNIT TECHNOLOGIES CO.,LTD.				
BOARD NAME MB-CADT24D_VERA			DRAWINGNO CNIT0302K1XKDL	
DESIGNED	yujianjiang00259	DATE <DATE_DN>	SHEET 60 OF 200	REV
REVIEWED	<REVIEWED>	DATE <DATE_RW>	Fri Aug 29 11:21:02 2025	

THIS DOCUMENT AND THE TECHNICAL DATA DISCLOSED ARE PROPRIETARY TO CNIT TECHNOLOGIES CO., LTD. AND SHALL NOT BE DUPLICATED USED RELEASED OR DISCLOSED WITHOUT EXPRESSING WRITTEN PERMISSION.

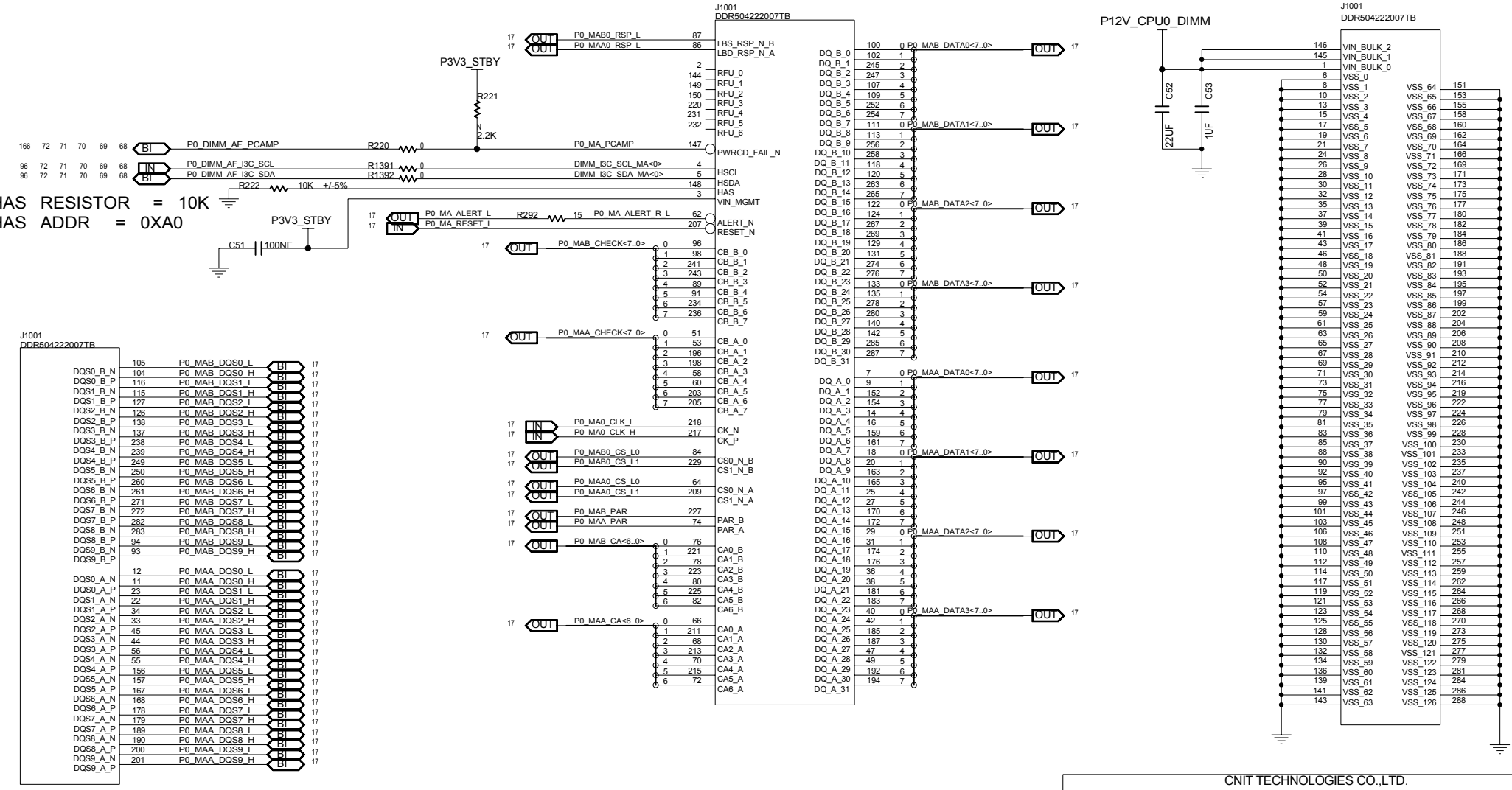

MODULE=---

FUNCTION=---

CNIT TECHNOLOGIES CO.,LTD.				
BOARD NAME MB-CADT24D_VERA			DRAWINGNO CNIT0302K1XKDL	
DESIGNED	yujianjiang00259	DATE <DATE_DN>	SHEET 61 OF 200	REV
REVIEWED	<REVIEWED>	DATE <DATE_RW>	Mon Sep 01 14:11:23 2025	

THIS DOCUMENT AND THE TECHNICAL DATA DISCLOSED ARE PROPRIETARY TO CNIT TECHNOLOGIES CO., LTD. AND SHALL NOT BE DUPLICATED USED RELEASED OR DISCLOSED WITHOUT EXPRESSING WRITTEN PERMISSION.

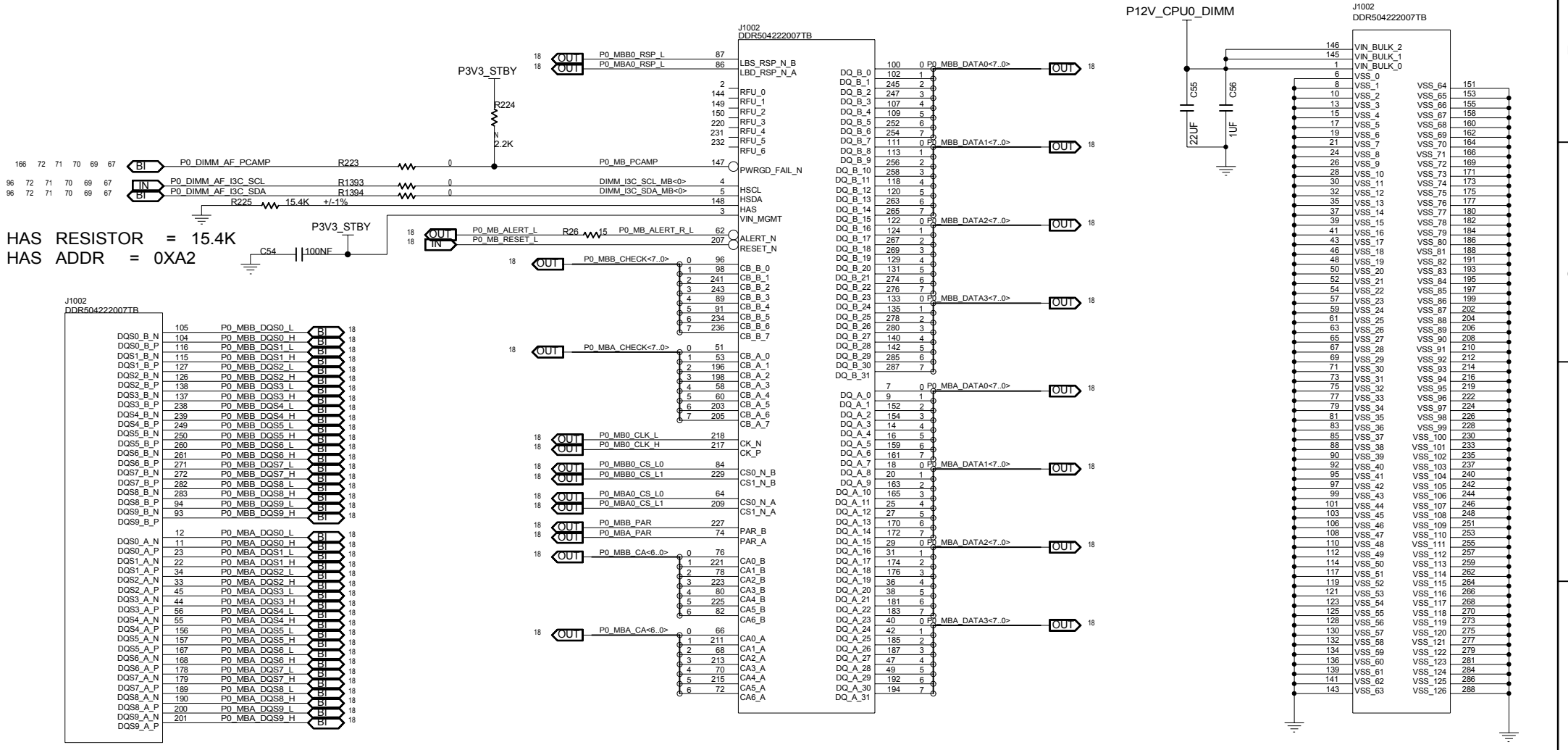

HAS RESISTOR = 15.4K
HAS ADDR = 0XA2

MODULE=---
FUNCTION=---

CNIT TECHNOLOGIES CO.,LTD.				
BOARD NAME MB-CADT24D_VERA			DRAWINGNO CNIT0302K1XKDL	
DESIGNED	yujianjiang00259	DATE <DATE_DN>	SHEET 62 OF 200	REV
REVIEWED	<REVIEWED>	DATE <DATE_RW>	Mon Sep 01 14:11:26 2025	

THIS DOCUMENT AND THE TECHNICAL DATA DISCLOSED ARE PROPRIETARY TO CNIT TECHNOLOGIES CO., LTD. AND SHALL NOT BE DUPLICATED USED RELEASED OR DISCLOSED WITHOUT EXPRESSING WRITTEN PERMISSION.

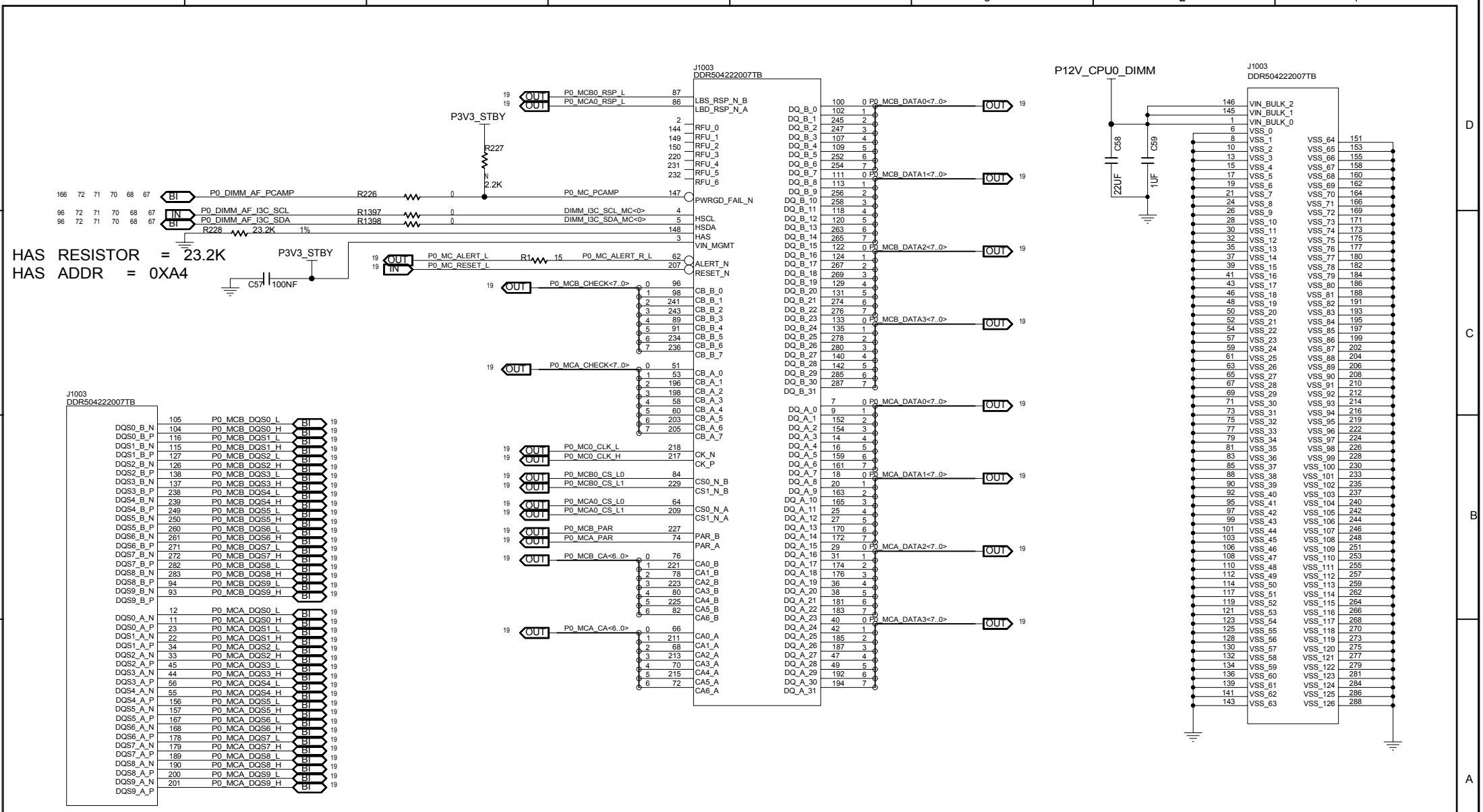

MODULE=---

FUNCTION=---

CNIT TECHNOLOGIES CO.,LTD.				
BOARD NAME MB-CADT24D_VERA			DRAWINGNO CNIT0302K1XKDL	
DESIGNED	yujianjiang00259	DATE <DATE_DN>	SHEET 63 OF 200	REV
REVIEWED	<REVIEWED>	DATE <DATE_RW>	Mon Sep 01 14:11:28 2025	

THIS DOCUMENT AND THE TECHNICAL DATA DISCLOSED ARE PROPRIETARY TO CNIT TECHNOLOGIES CO., LTD. AND SHALL NOT BE DUPLICATED USED RELEASED OR DISCLOSED WITHOUT EXPRESSING WRITTEN PERMISSION.

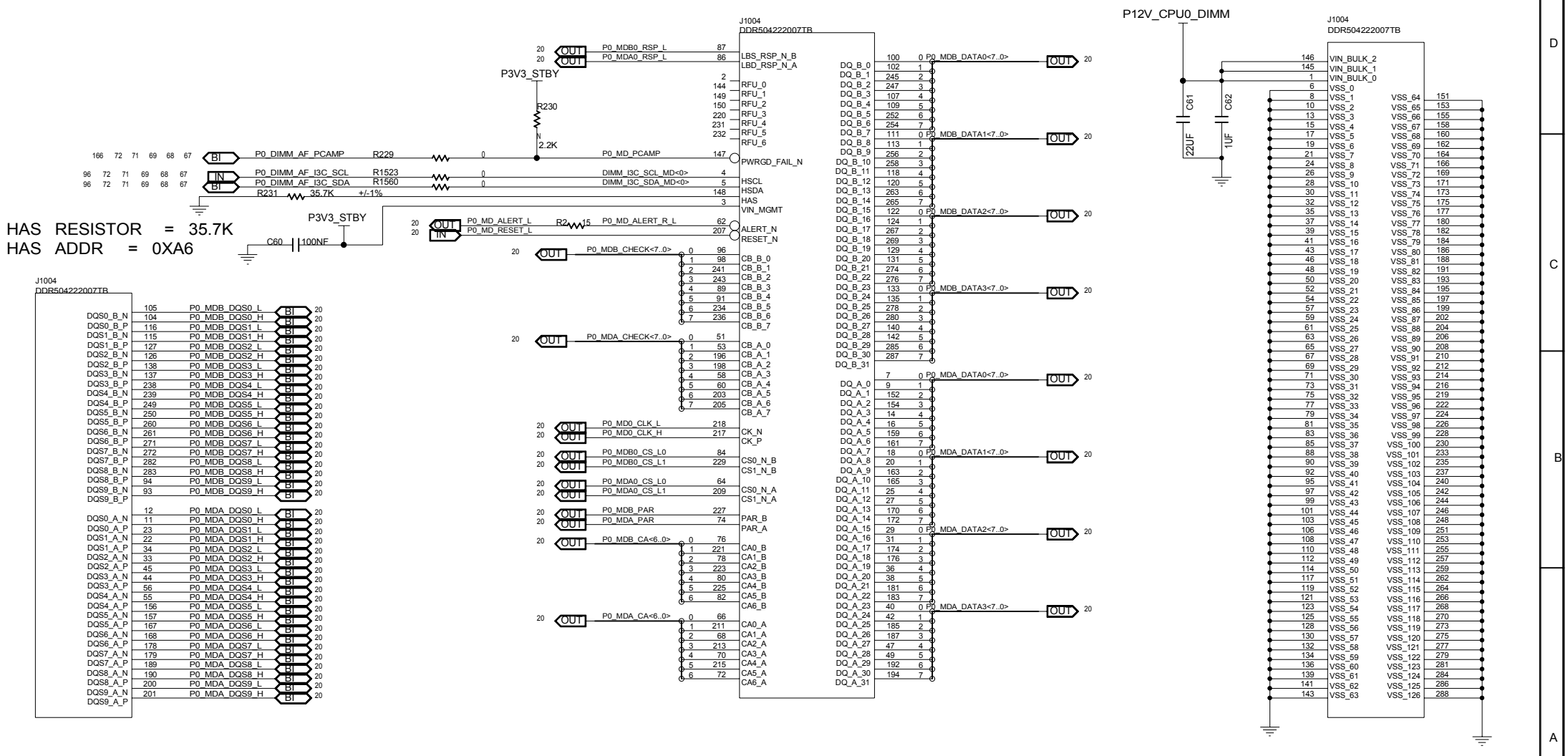

HAS RESISTOR = 35.7K
HAS ADDR = 0XA6

MODULE=---
FUNCTION=---

CNIT TECHNOLOGIES CO.,LTD.				
BOARD NAME MB-CADT24D_VERA			DRAWINGNO CNIT0302K1XKDL	
DESIGNED	yujianjiang00259	DATE <DATE_DN>	SHEET 64 OF 200	REV
REVIEWED	<REVIEWED>	DATE <DATE_RW>	Sat Sep 13 14:57:25 2025	

THIS DOCUMENT AND THE TECHNICAL DATA DISCLOSED ARE PROPRIETARY TO CNIT TECHNOLOGIES CO., LTD. AND SHALL NOT BE DUPLICATED USED RELEASED OR DISCLOSED WITHOUT EXPRESSING WRITTEN PERMISSION.

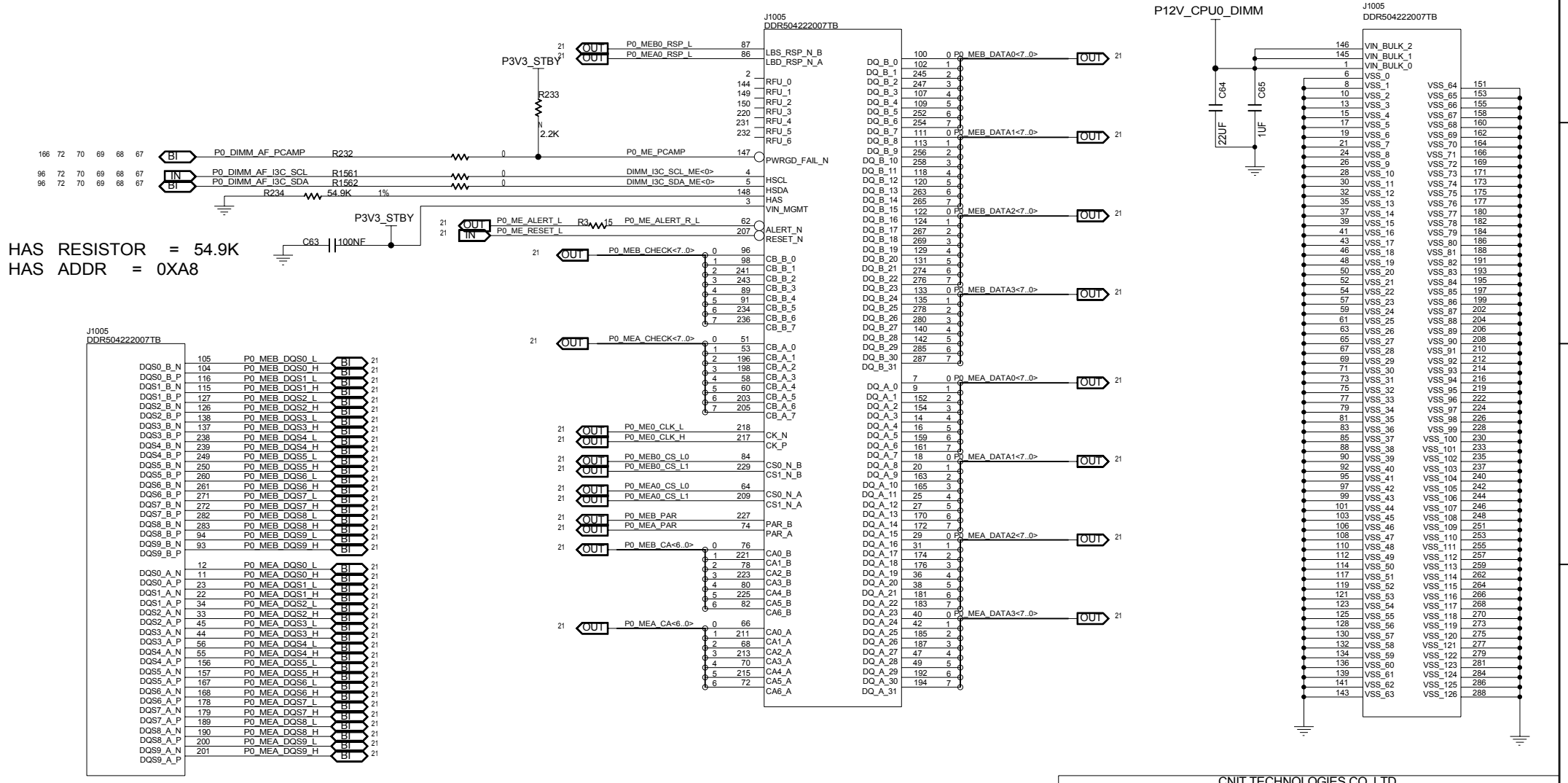

MODULE=---

FUNCTION=---

CNIT TECHNOLOGIES CO.,LTD.				
BOARD NAME	MB-CADT24D_VERA		DRAWINGNO	CNIT0302K1XKDL
DESIGNED	yujianjiang00259	DATE <DATE_DN>	SHEET 65 OF 200	REV
REVIEWED	<REVIEWED>	DATE <DATE_RW>	Mon Sep 01 14:11:33 2025	

THIS DOCUMENT AND THE TECHNICAL DATA DISCLOSED ARE PROPRIETARY TO CNIT TECHNOLOGIES CO., LTD. AND SHALL NOT BE DUPLICATED USED RELEASED OR DISCLOSED WITHOUT EXPRESSING WRITTEN PERMISSION.

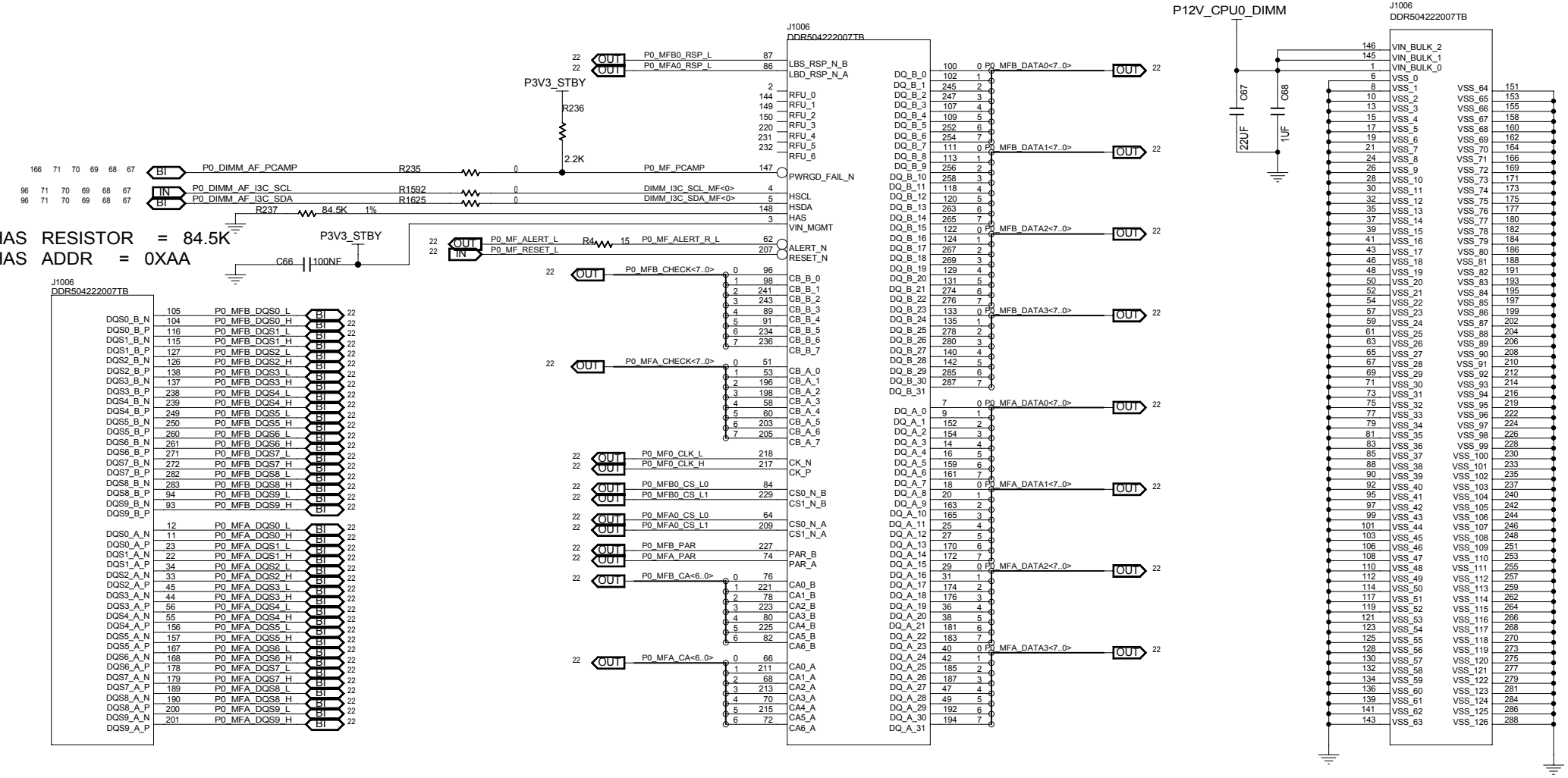

HAS RESISTOR = 84.5K
HAS ADDR = 0XAA

MODULE=---
FUNCTION=---

CNIT TECHNOLOGIES CO.,LTD.				
BOARD NAME MB-CADT24D_VERA			DRAWINGNO CNIT0302K1XKDL	
DESIGNED	yujianjiang00259	DATE <DATE_DN>	SHEET 66 OF 200	REV
REVIEWED	<REVIEWED>	DATE <DATE_RW>	Fri Aug 29 11:21:06 2025	

THIS DOCUMENT AND THE TECHNICAL DATA DISCLOSED ARE PROPRIETARY TO CNIT TECHNOLOGIES CO., LTD. AND SHALL NOT BE DUPLICATED USED RELEASED OR DISCLOSED WITHOUT EXPRESSING WRITTEN PERMISSION.

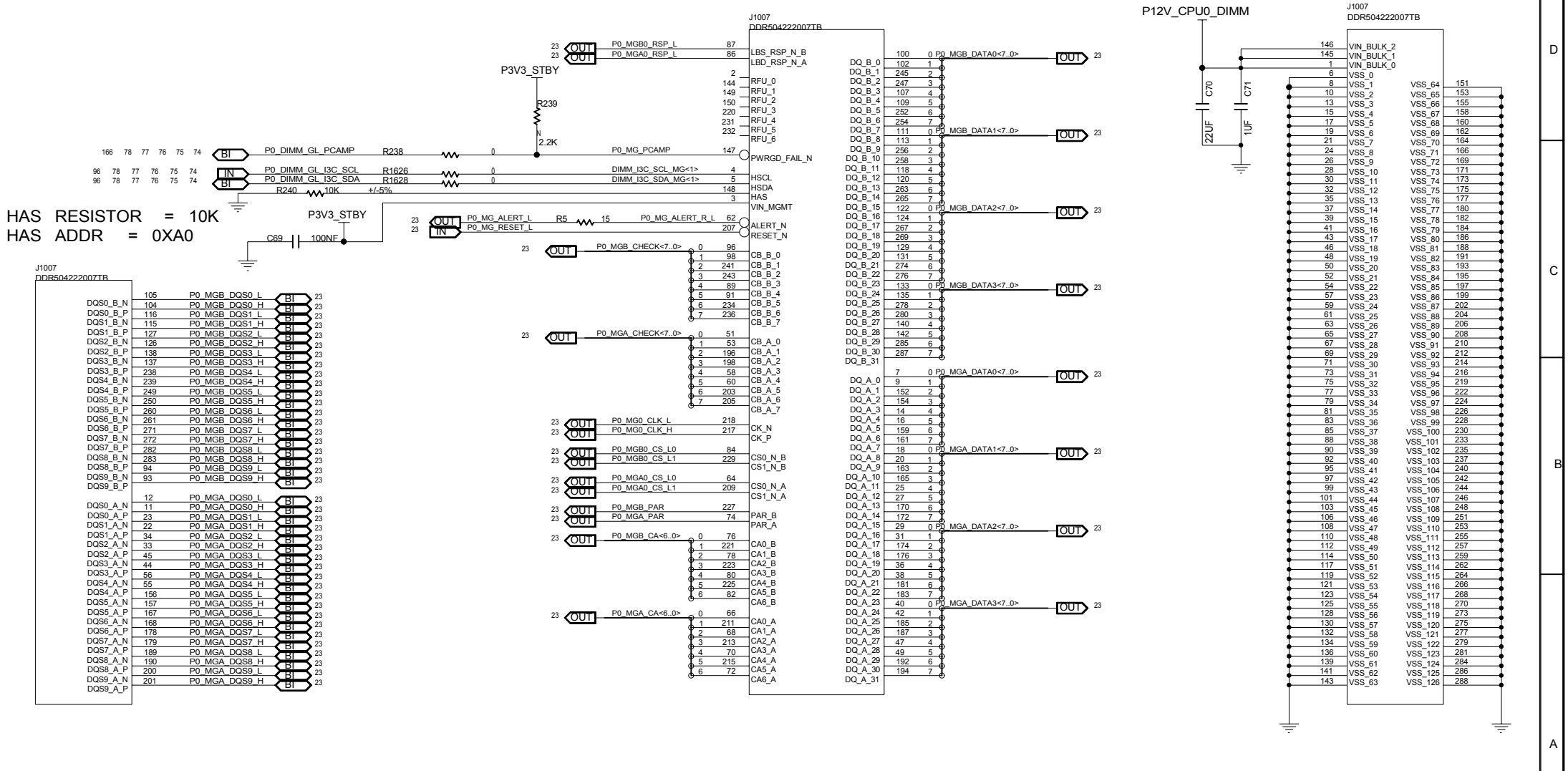

MODULE=---

FUNCTION=---

CNIT TECHNOLOGIES CO.,LTD.				
BOARD NAME	MB-CADT24D_VERA		DRAWINGNO	CNIT0302K1XKDL
DESIGNED	yujianjiang00259	DATE <DATE_DN>	SHEET 67 OF 200	REV
REVIEWED	<REVIEWED>	DATE <DATE_RW>	Sat Sep 13 14:57:25 2025	

THIS DOCUMENT AND THE TECHNICAL DATA DISCLOSED ARE PROPRIETARY TO CNIT TECHNOLOGIES CO., LTD. AND SHALL NOT BE DUPLICATED USED RELEASED OR DISCLOSED WITHOUT EXPRESSING WRITTEN PERMISSION.

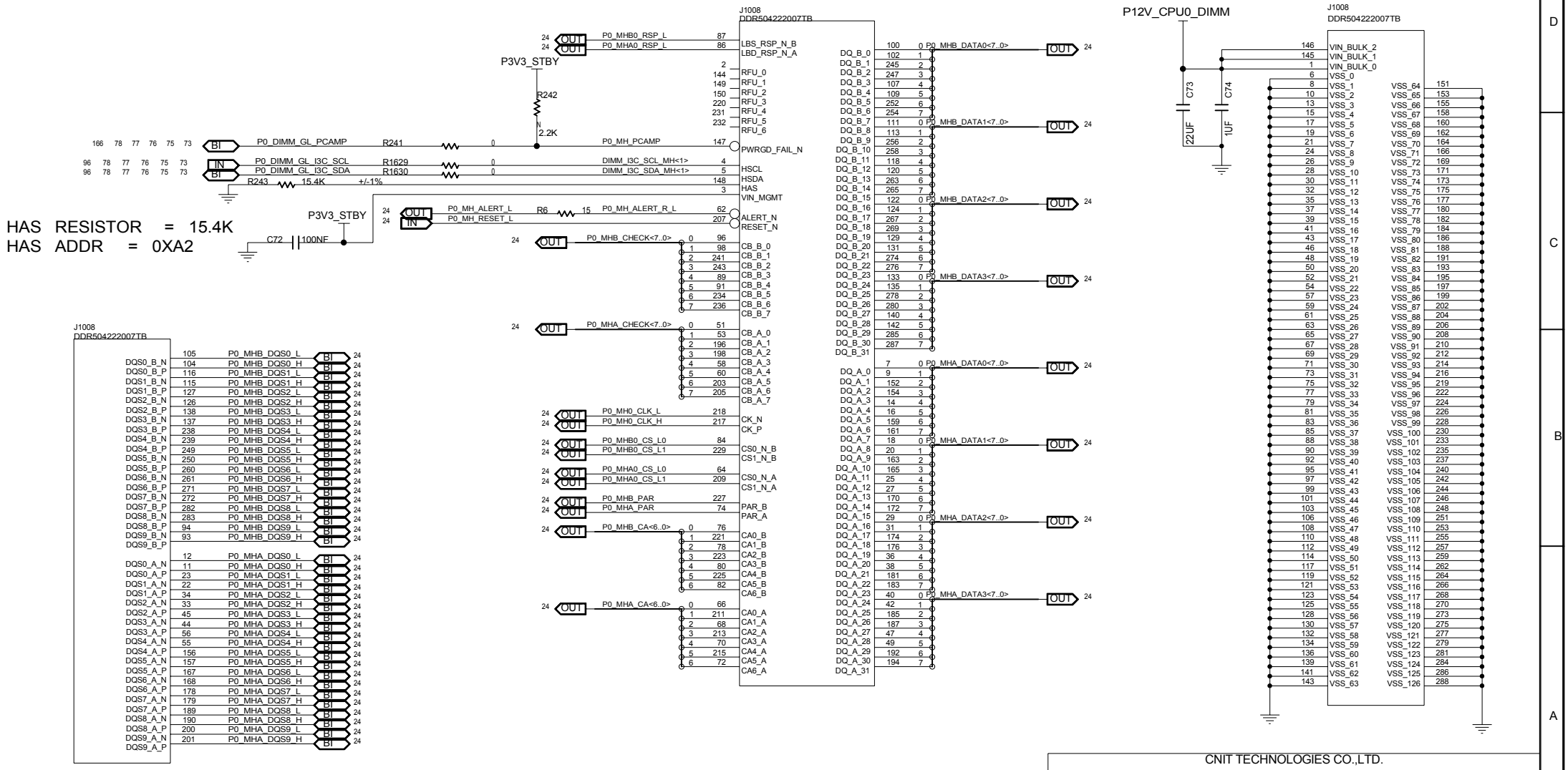

HAS RESISTOR = 15.4K
HAS ADDR = 0XA2

MODULE=---
FUNCTION=---

CNIT TECHNOLOGIES CO.,LTD.				
BOARD NAME MB-CADT24D_VERA			DRAWINGNO CNIT0302K1XKDL	
DESIGNED	yujianjiang00259	DATE <DATE_DN>	SHEET 68 OF 200	REV
REVIEWED	<REVIEWED>	DATE <DATE_RW>	Mon Sep 01 14:11:37 2025	

THIS DOCUMENT AND THE TECHNICAL DATA DISCLOSED ARE PROPRIETARY TO CNIT TECHNOLOGIES CO., LTD. AND SHALL NOT BE DUPLICATED USED RELEASED OR DISCLOSED WITHOUT EXPRESSING WRITTEN PERMISSION.

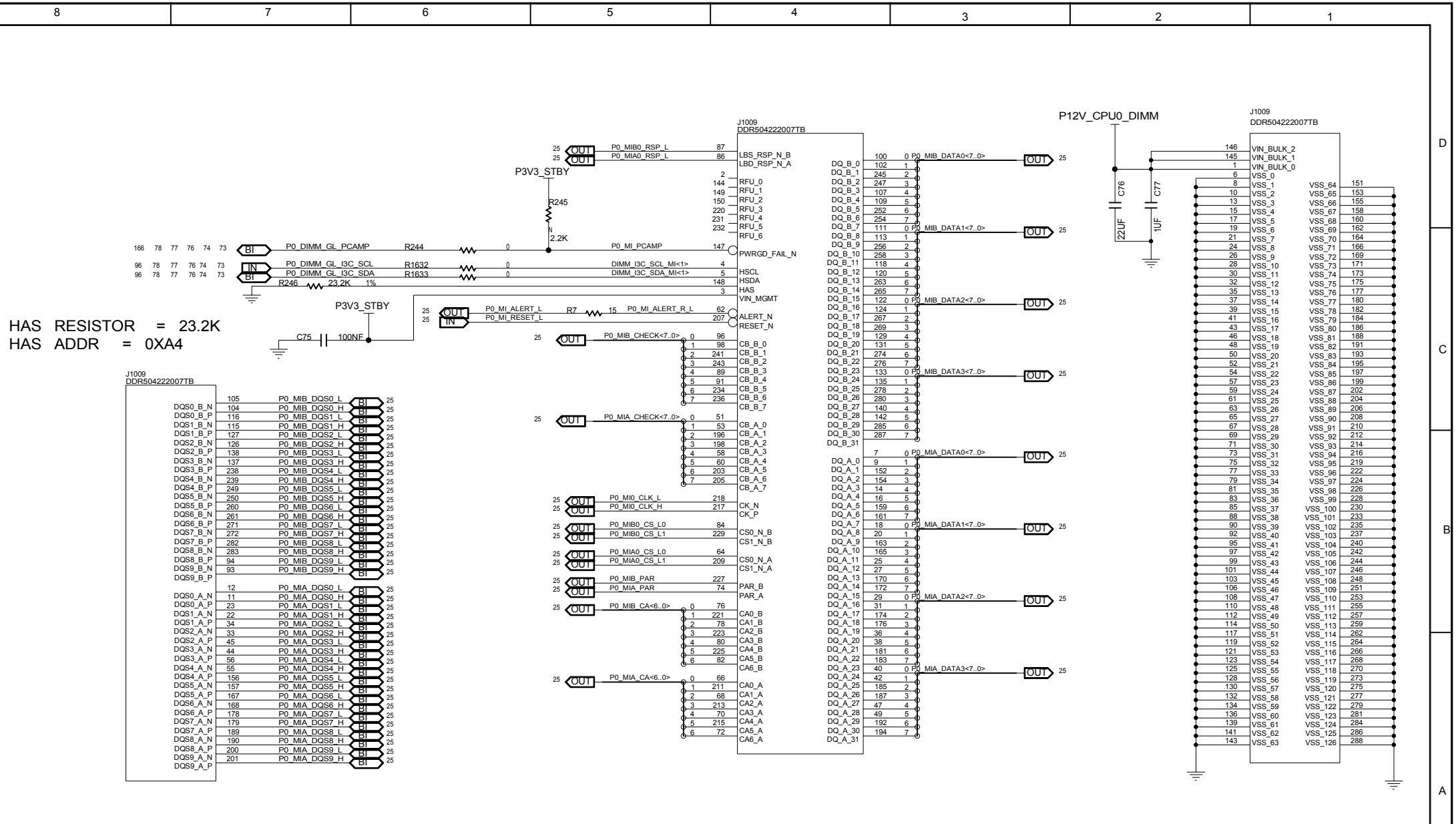

CNIT TECHNOLOGIES CO.,LTD.				
BOARD NAME	MB-CADT24D_VERA		DRAWINGNO	CNIT0302K1XKDL
DESIGNED	yujianjiang00259	DATE <DATE_DN>	SHEET 69 OF 200	REV
REVIEWED	<REVIEWED>	DATE <DATE_RW>	Mon Sep 01 14:11:40 2025	

THIS DOCUMENT AND THE TECHNICAL DATA DISCLOSED ARE PROPRIETARY TO CNIT TECHNOLOGIES CO., LTD. AND SHALL NOT BE DUPLICATED USED RELEASED OR DISCLOSED WITHOUT EXPRESSING WRITTEN PERMISSION.

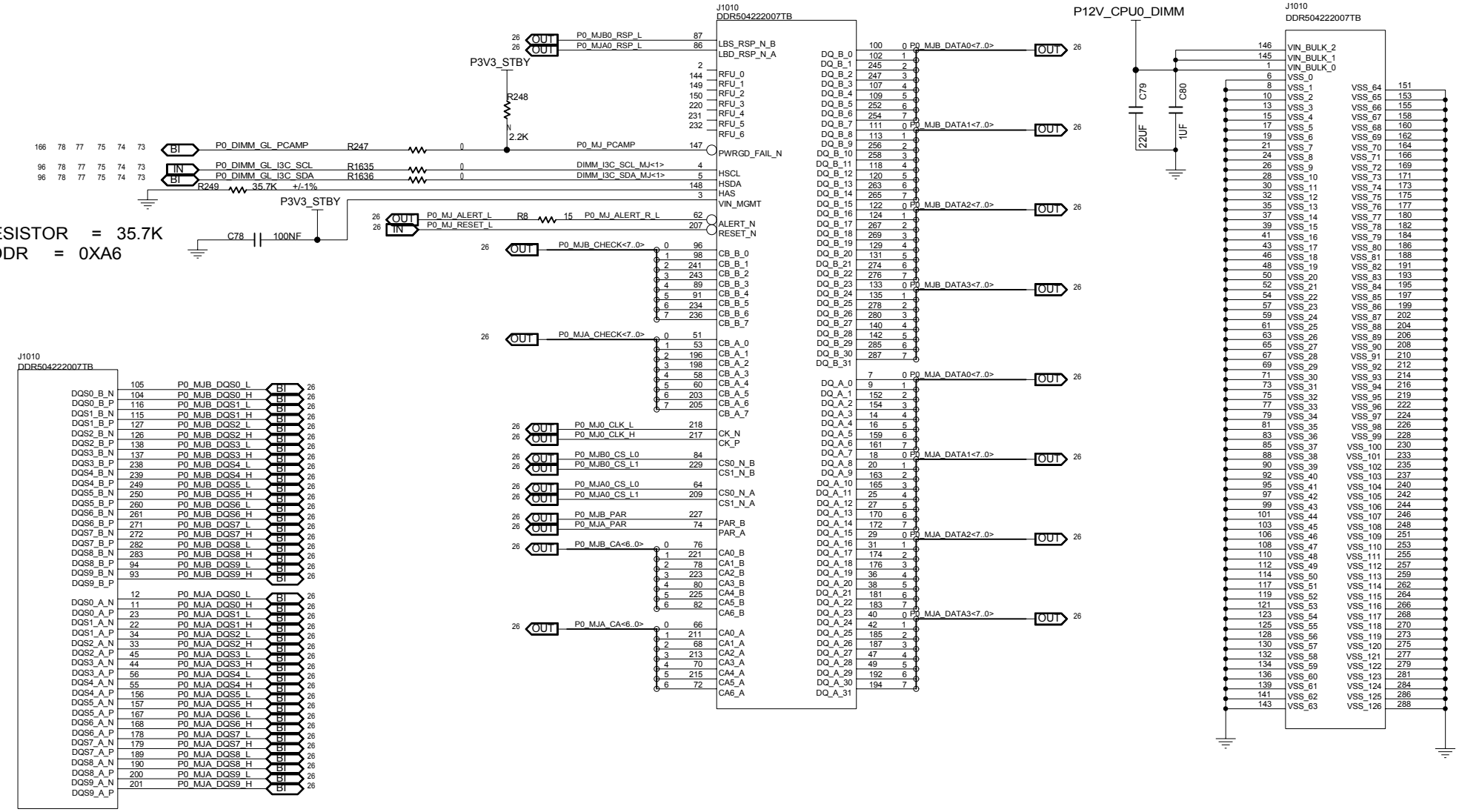

HAS RESISTOR = 35.7K
HAS ADDR = 0XA6

MODULE=---
FUNCTION=---

CNIT TECHNOLOGIES CO.,LTD.				
BOARD NAME MB-CADT24D_VERA			DRAWINGNO CNIT0302K1XKDL	
DESIGNED	yujianjiang00259	DATE <DATE_DN>	SHEET 70 OF 200	REV
REVIEWED	<REVIEWED>	DATE <DATE_RW>	Mon Sep 01 14:11:42 2025	

THIS DOCUMENT AND THE TECHNICAL DATA DISCLOSED ARE PROPRIETARY TO CNIT TECHNOLOGIES CO., LTD. AND SHALL NOT BE DUPLICATED USED RELEASED OR DISCLOSED WITHOUT EXPRESSING WRITTEN PERMISSION.

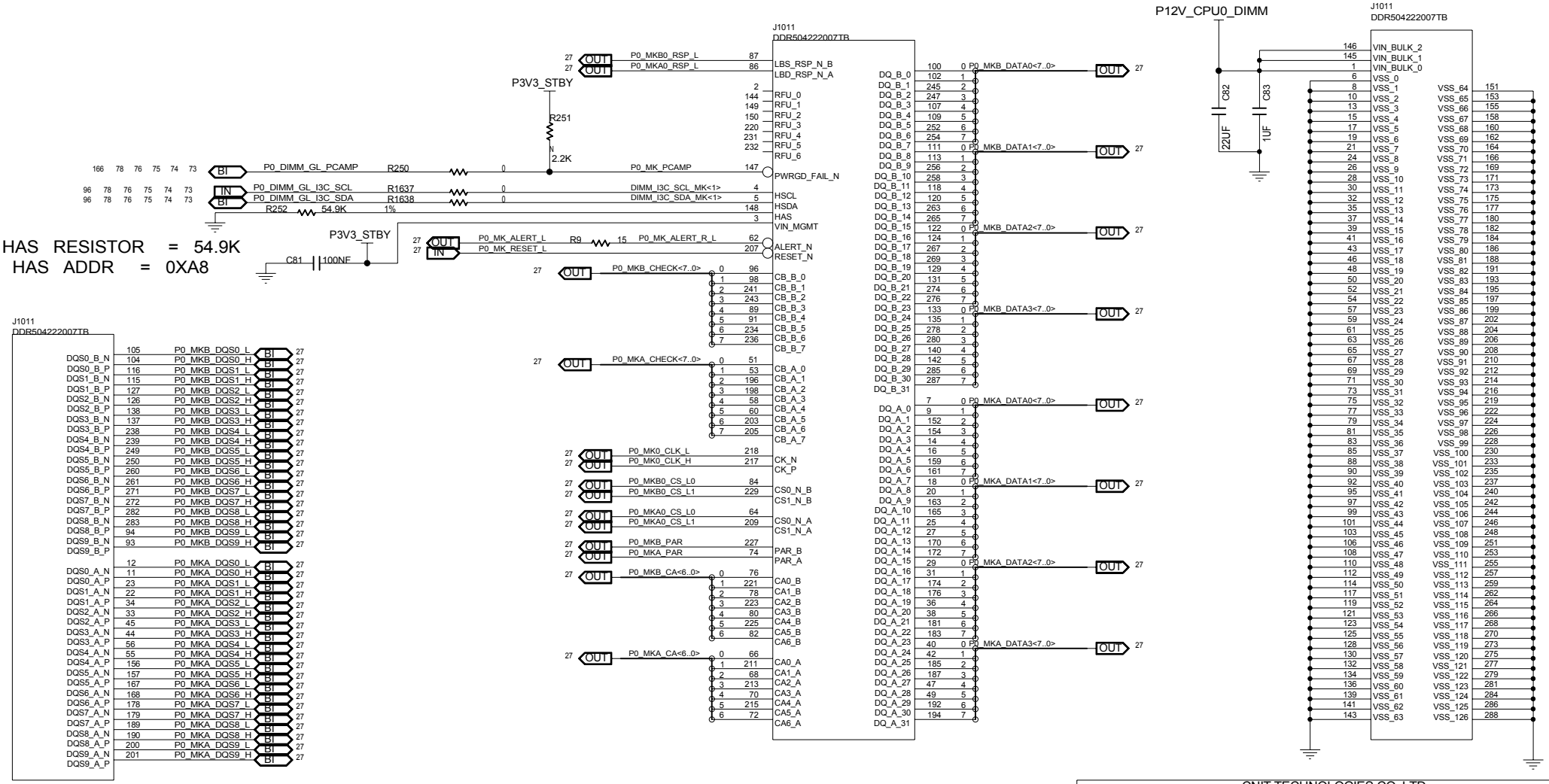

MODULE=---

FUNCTION=---

CNIT TECHNOLOGIES CO.,LTD.				
BOARD NAME MB-CADT24D_VERA			DRAWINGNO CNIT0302K1XKDL	
DESIGNED	yujianjiang00259	DATE <DATE_DN>	SHEET 71 OF 200	REV
REVIEWED	<REVIEWED>	DATE <DATE_RW>	Mon Sep 01 14:11:44 2025	

THIS DOCUMENT AND THE TECHNICAL DATA DISCLOSED ARE PROPRIETARY TO CNIT TECHNOLOGIES CO., LTD. AND SHALL NOT BE DUPLICATED USED RELEASED OR DISCLOSED WITHOUT EXPRESSING WRITTEN PERMISSION.

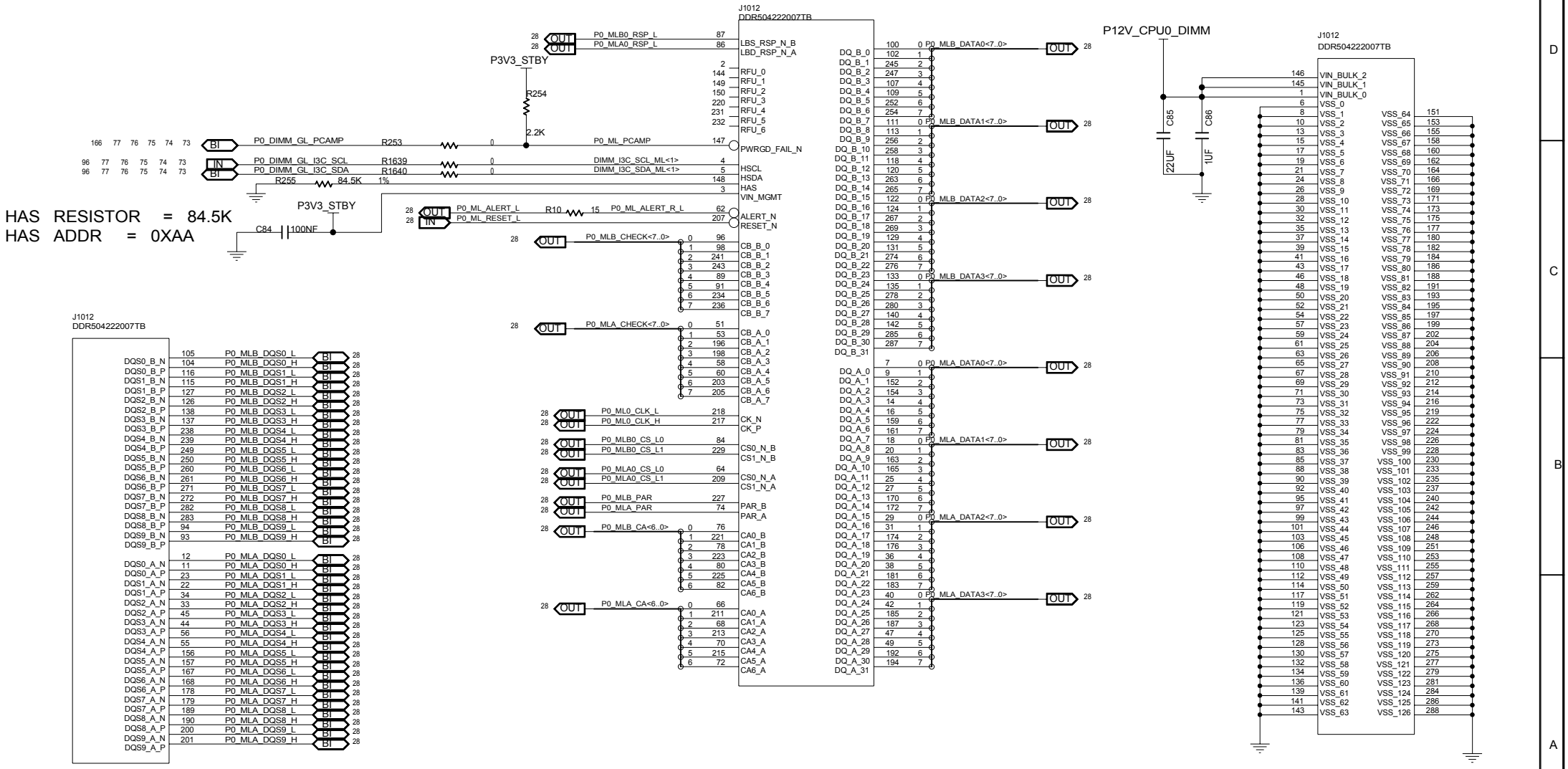

MODULE=---

FUNCTION=---

CNIT TECHNOLOGIES CO.,LTD.				
BOARD NAME	MB-CADT24D_VERA		DRAWINGNO	CNIT0302K1XKDL
DESIGNED	yujianjiang00259	DATE <DATE_DN>	SHEET 72 OF 200	REV
REVIEWED	<REVIEWED>	DATE <DATE_RW>	Sat Sep 13 14:57:26 2025	

THIS DOCUMENT AND THE TECHNICAL DATA DISCLOSED ARE PROPRIETARY TO CNIT TECHNOLOGIES CO., LTD. AND SHALL NOT BE DUPLICATED USED RELEASED OR DISCLOSED WITHOUT EXPRESSING WRITTEN PERMISSION.

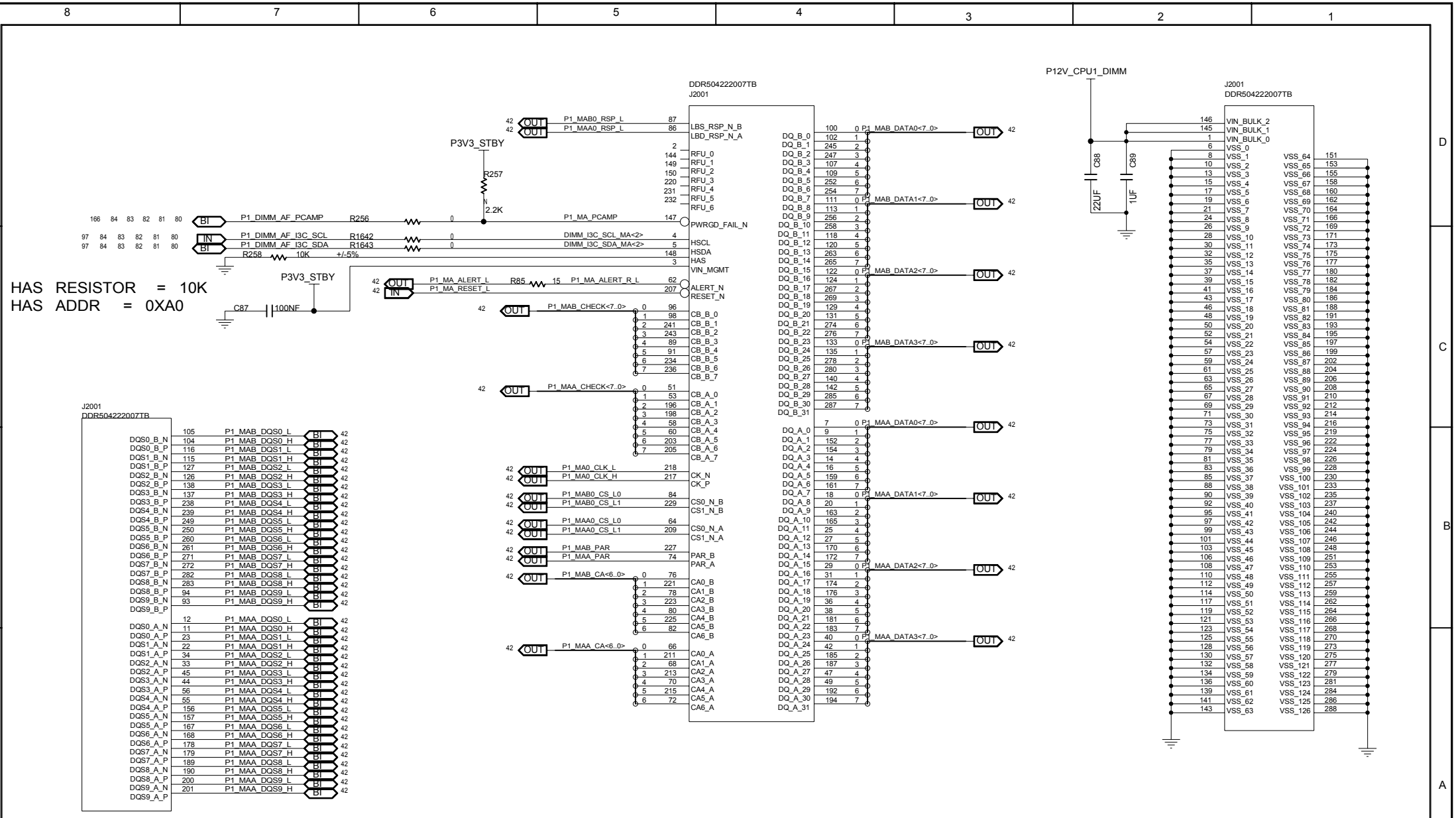

CNIT TECHNOLOGIES CO.,LTD.				
BOARD NAME MB-CADT24D_VERA			DRAWINGNO CNIT0302K1XKDL	
DESIGNED	yujianjiang00259	DATE <DATE_DN>	SHEET 73 OF 200	REV
REVIEWED	<REVIEWED>	DATE <DATE_RW>	Mon Sep 01 14:11:46 2025	

THIS DOCUMENT AND THE TECHNICAL DATA DISCLOSED ARE PROPRIETARY TO CNIT TECHNOLOGIES CO., LTD. AND SHALL NOT BE DUPLICATED USED RELEASED OR DISCLOSED WITHOUT EXPRESSING WRITTEN PERMISSION.

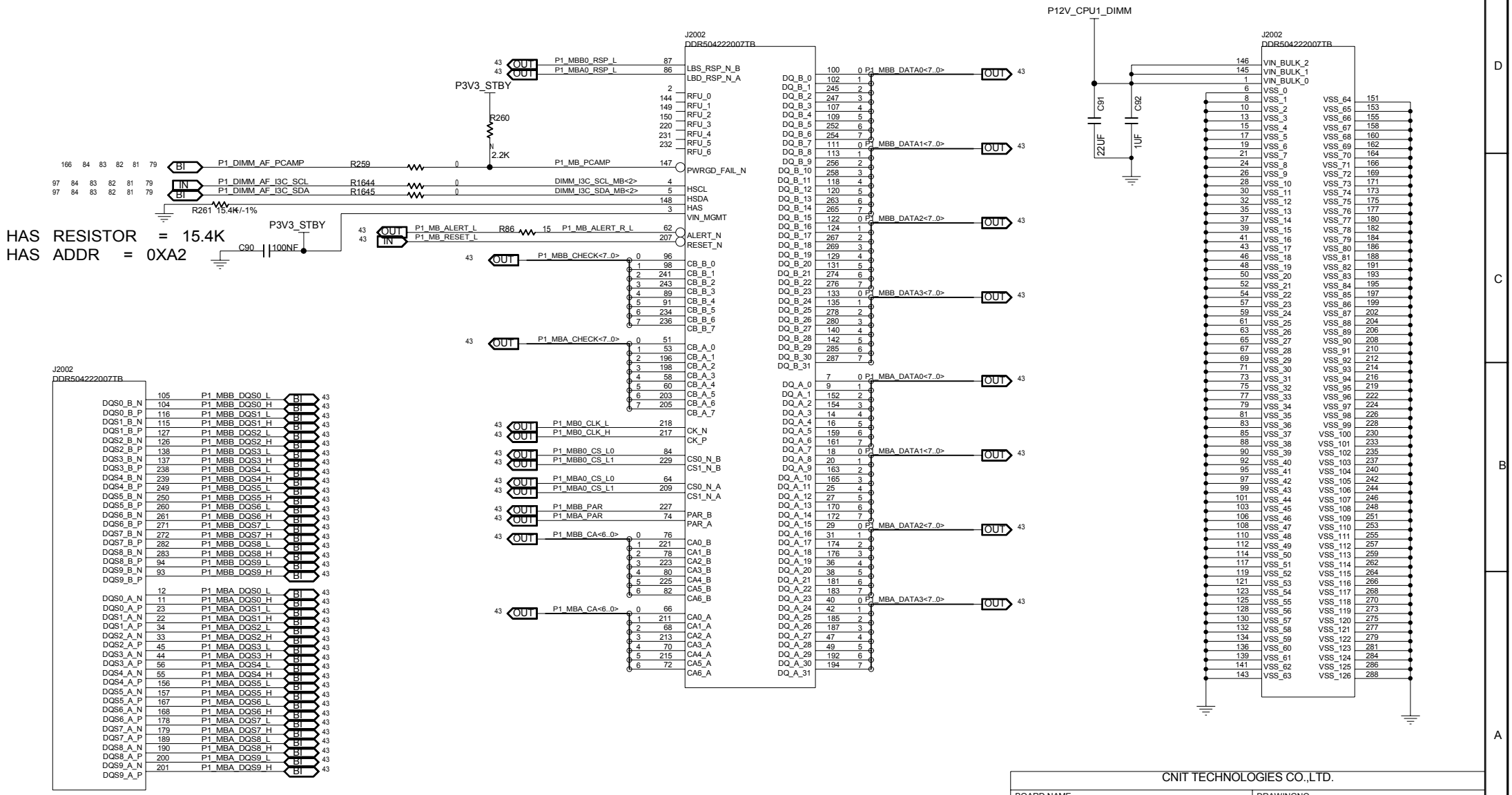

MODULE=---

FUNCTION=---

CNIT TECHNOLOGIES CO.,LTD.				
BOARD NAME MB-CADT24D_VERA			DRAWINGNO CNIT0302K1XKDL	
DESIGNED	yujianjiang00259	DATE <DATE_DN>	SHEET 74 OF 200	REV
REVIEWED	<REVIEWED>	DATE <DATE_RW>	Mon Sep 01 14:11:49 2025	

THIS DOCUMENT AND THE TECHNICAL DATA DISCLOSED ARE PROPRIETARY TO CNIT TECHNOLOGIES CO., LTD. AND SHALL NOT BE DUPLICATED USED RELEASED OR DISCLOSED WITHOUT EXPRESSING WRITTEN PERMISSION.

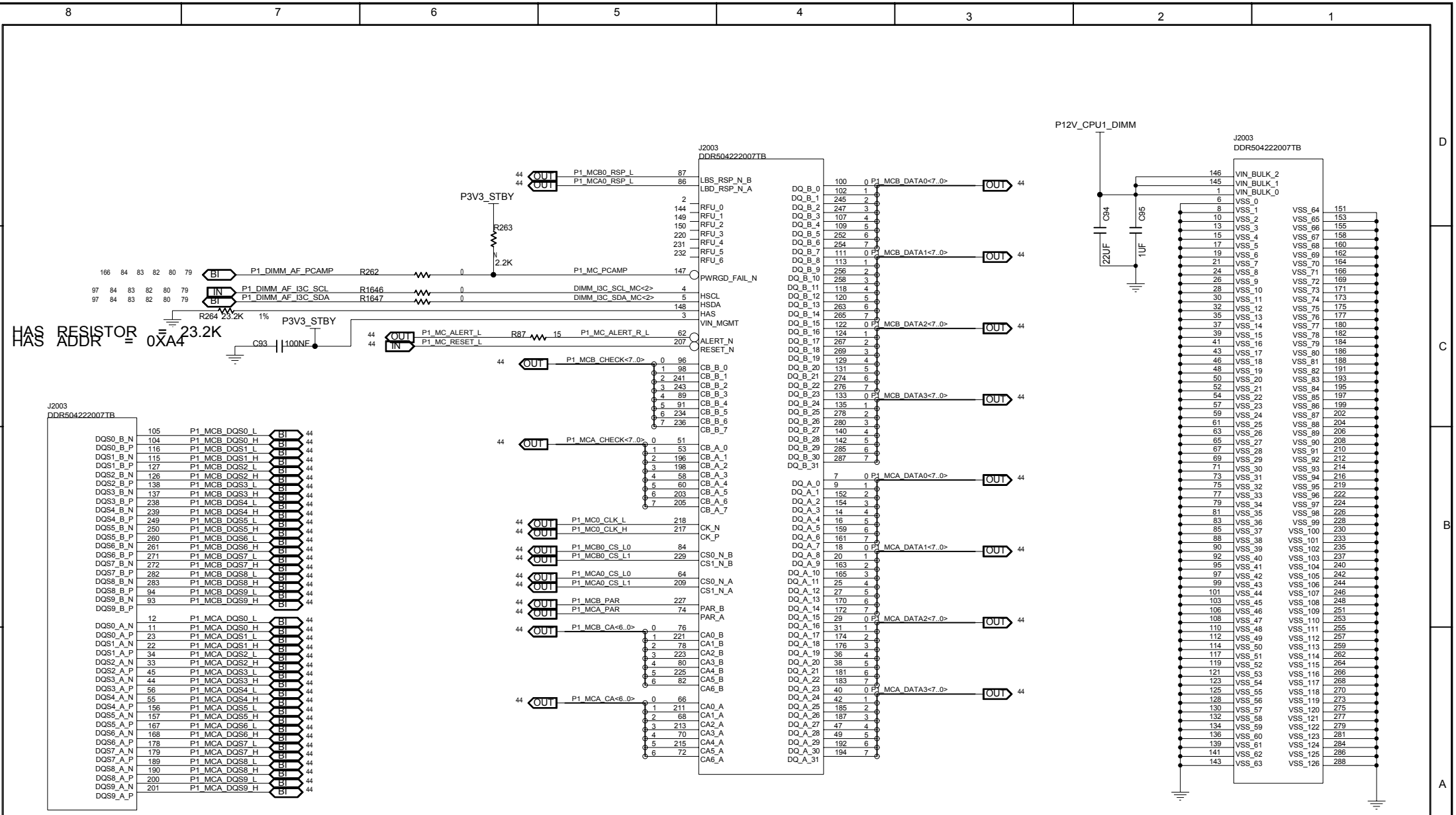

CNIT TECHNOLOGIES CO.,LTD.				
BOARD NAME MB-CADT24D_VERA			DRAWINGNO CNIT0302K1XKDL	
DESIGNED	yujianjiang00259	DATE <DATE_DN>	SHEET 75 OF 200	REV
REVIEWED	<REVIEWED>	DATE <DATE_RW>	Mon Sep 01 14:11:51 2025	

THIS DOCUMENT AND THE TECHNICAL DATA DISCLOSED ARE PROPRIETARY TO CNIT TECHNOLOGIES CO., LTD. AND SHALL NOT BE DUPLICATED USED RELEASED OR DISCLOSED WITHOUT EXPRESSING WRITTEN PERMISSION.

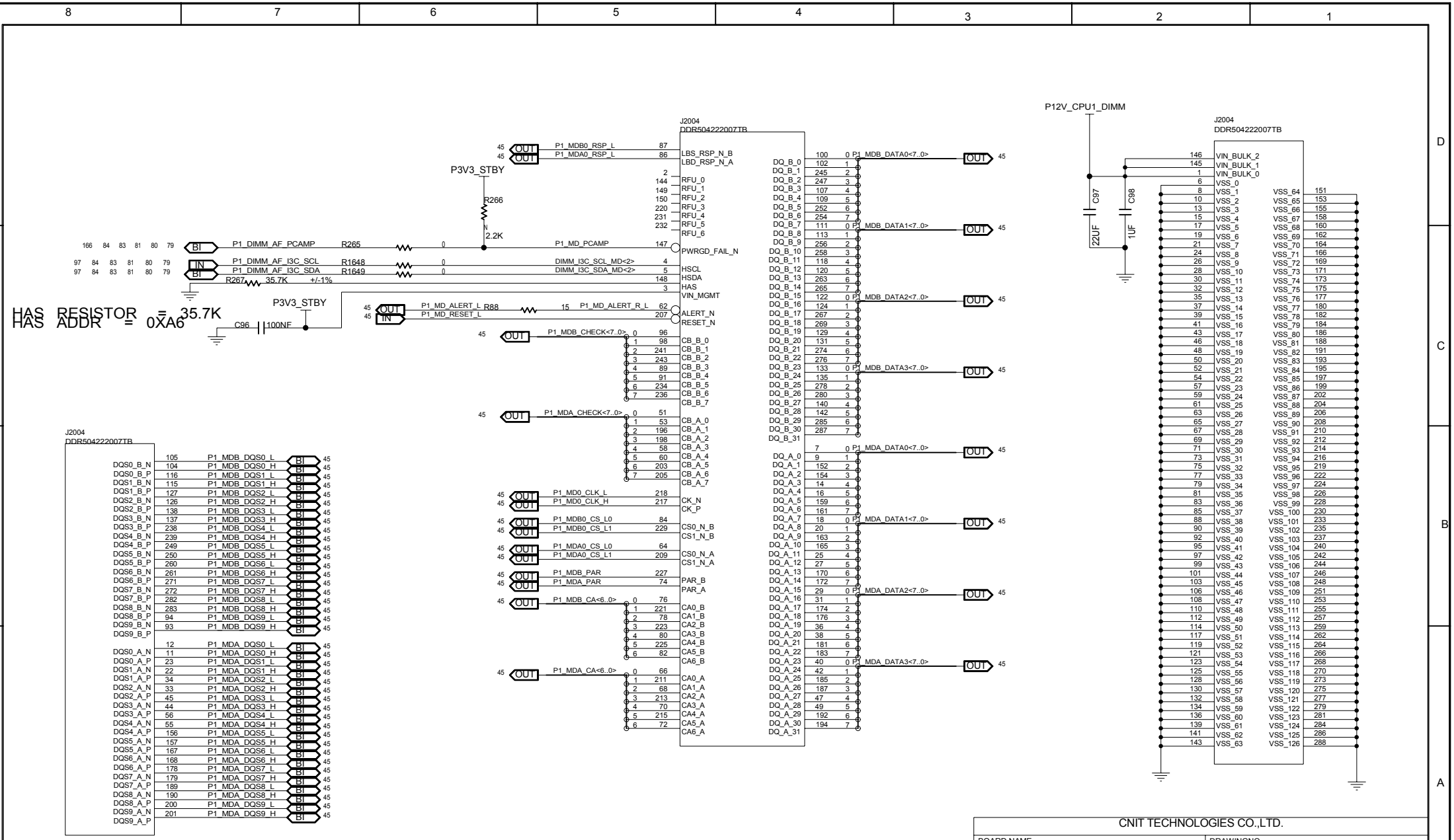

CNIT TECHNOLOGIES CO.,LTD.				
BOARD NAME MB-CADT24D_VERA			DRAWINGNO CNIT0302K1XKDL	
DESIGNED	yujianjiang00259	DATE <DATE_DN>	SHEET 76 OF 200	REV
REVIEWED	<REVIEWED>	DATE <DATE_RW>	Mon Sep 01 14:11:53 2025	

THIS DOCUMENT AND THE TECHNICAL DATA DISCLOSED ARE PROPRIETARY TO CNIT TECHNOLOGIES CO., LTD. AND SHALL NOT BE DUPLICATED USED RELEASED OR DISCLOSED WITHOUT EXPRESSING WRITTEN PERMISSION.

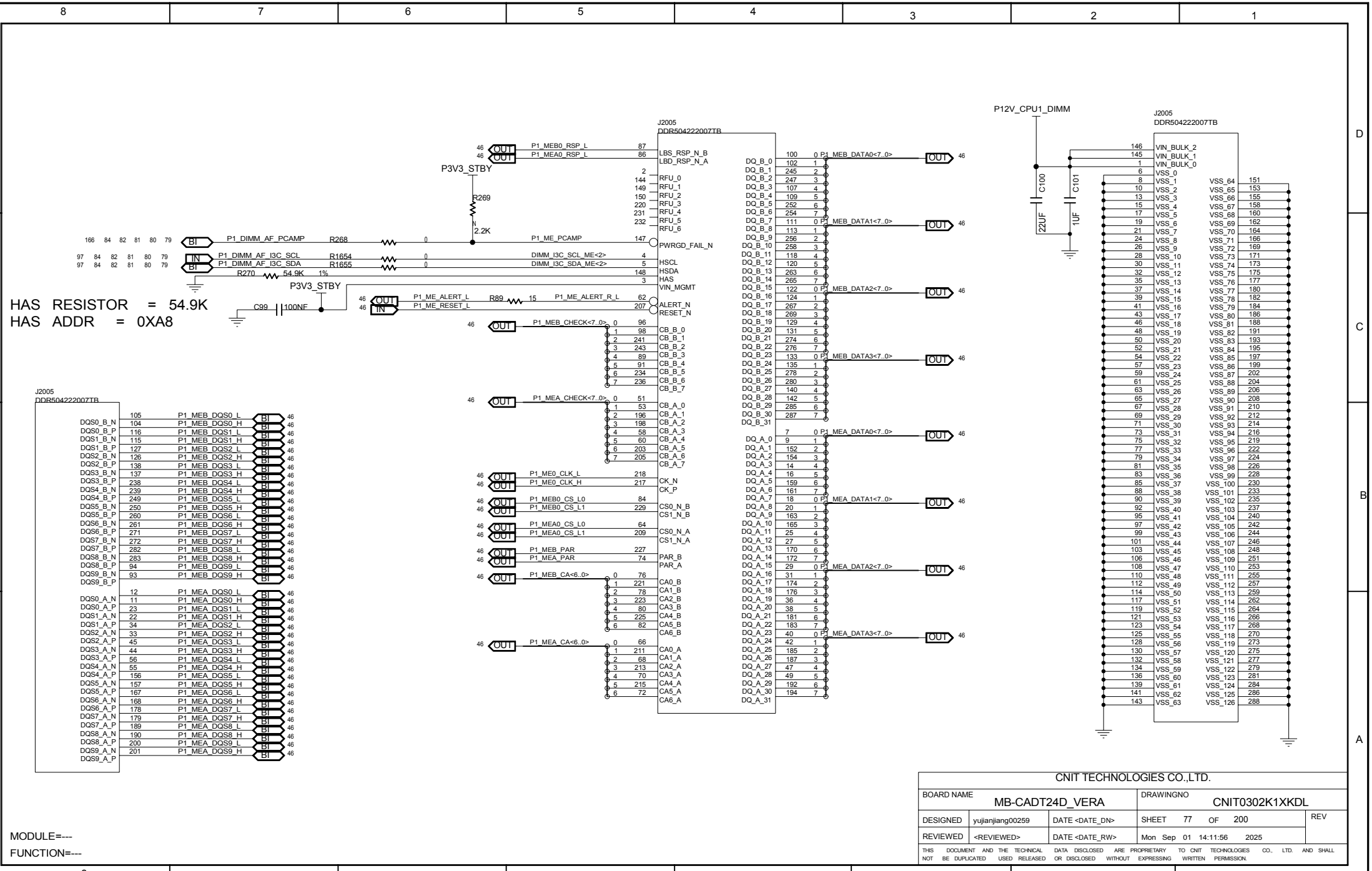

CNIT TECHNOLOGIES CO.,LTD.

BOARD NAME	MB-CADT24D_VERA	DRAWINGNO	CNIT0302K1XKDL
DESIGNED	yujianjiang00259	DATE <DATE_DN>	SHEET 77 OF 200
REVIEWED	<REVIEWED>	DATE <DATE_RW>	Mon Sep 01 14:11:56 2025

REV

THIS DOCUMENT AND THE TECHNICAL DATA DISCLOSED ARE PROPRIETARY TO CNIT TECHNOLOGIES CO., LTD. AND SHALL NOT BE DUPLICATED USED RELEASED OR DISCLOSED WITHOUT EXPRESSING WRITTEN PERMISSION.

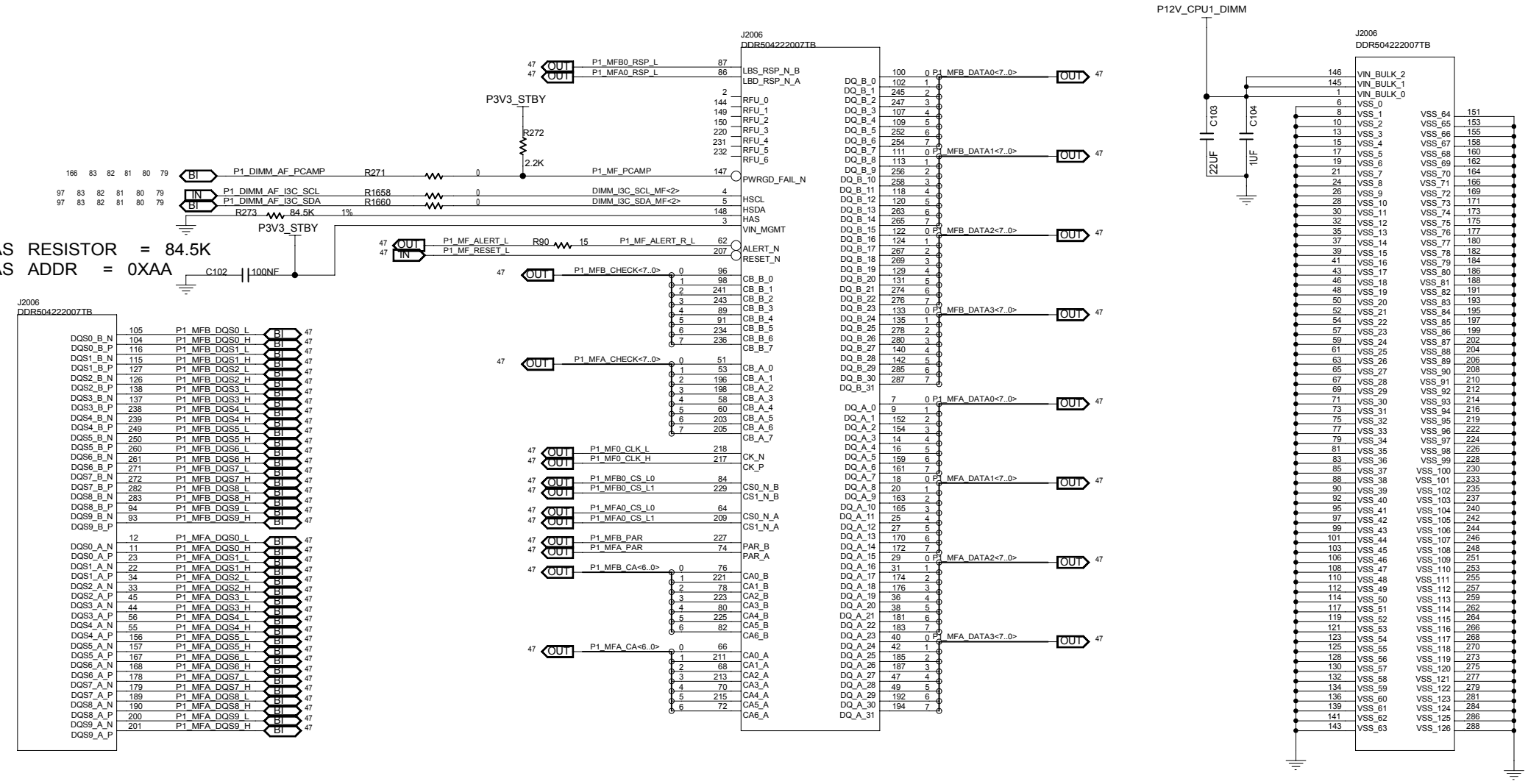

MODULE=---

FUNCTION=---

CNIT TECHNOLOGIES CO.,LTD.				
BOARD NAME	MB-CADT24D_VERA		DRAWINGNO	CNIT0302K1XKDL
DESIGNED	yujianjiang00259	DATE <DATE_DN>	SHEET 78 OF 200	REV
REVIEWED	<REVIEWED>	DATE <DATE_RW>	Fri Aug 29 11:21:13 2025	

THIS DOCUMENT AND THE TECHNICAL DATA DISCLOSED ARE PROPRIETARY TO CNIT TECHNOLOGIES CO., LTD. AND SHALL NOT BE DUPLICATED USED RELEASED OR DISCLOSED WITHOUT EXPRESSING WRITTEN PERMISSION.

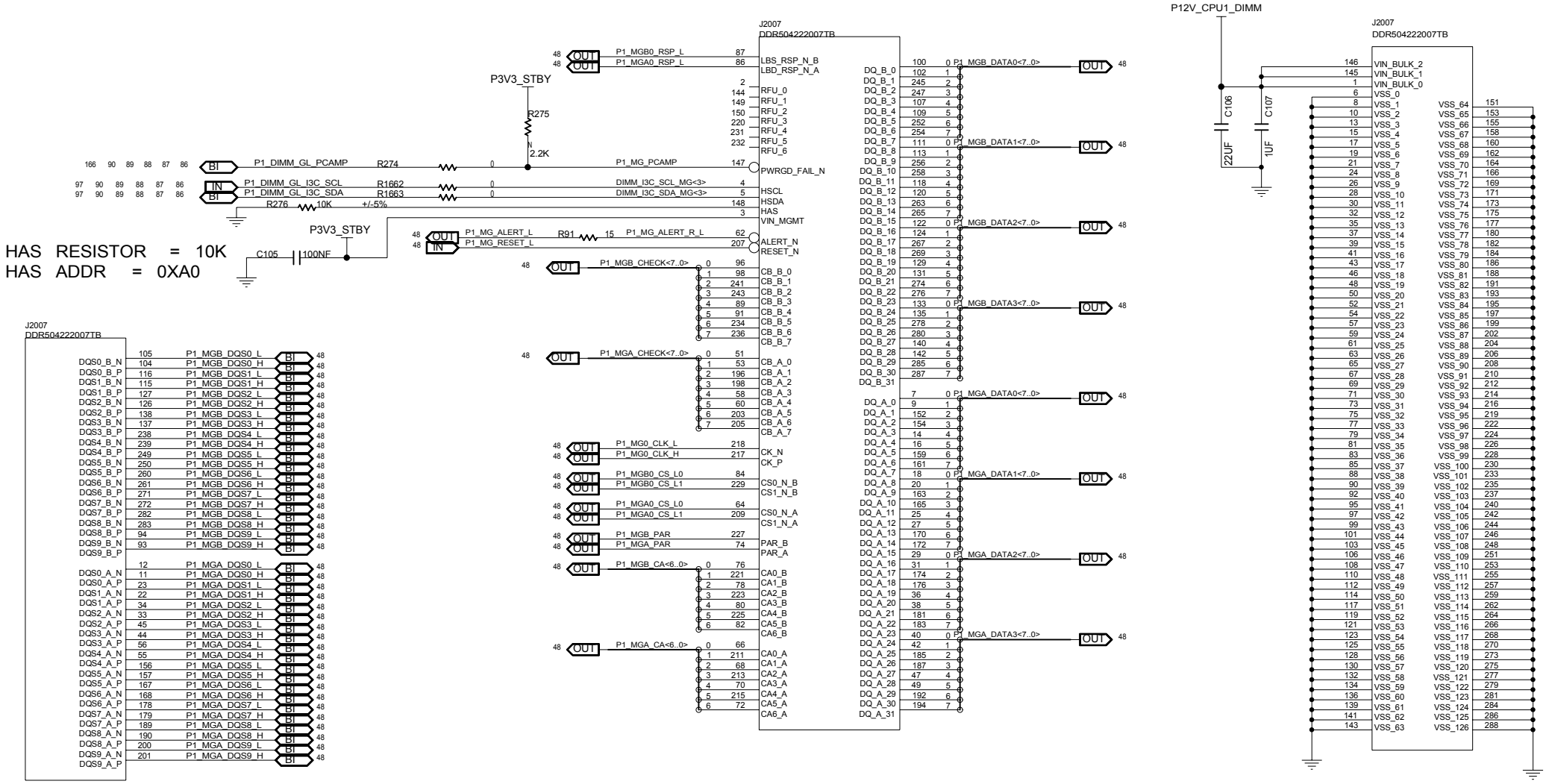

MODULE=---

FUNCTION=---

CNIT TECHNOLOGIES CO.,LTD.				
BOARD NAME MB-CADT24D_VERA			DRAWINGNO CNIT0302K1XKDL	
DESIGNED	yujianjiang00259	DATE <DATE_DN>	SHEET 79 OF 200	REV
REVIEWED	<REVIEWED>	DATE <DATE_RW>	Sat Sep 13 14:27:30 2025	

THIS DOCUMENT AND THE TECHNICAL DATA DISCLOSED ARE PROPRIETARY TO CNIT TECHNOLOGIES CO., LTD. AND SHALL NOT BE DUPLICATED USED RELEASED OR DISCLOSED WITHOUT EXPRESSING WRITTEN PERMISSION.

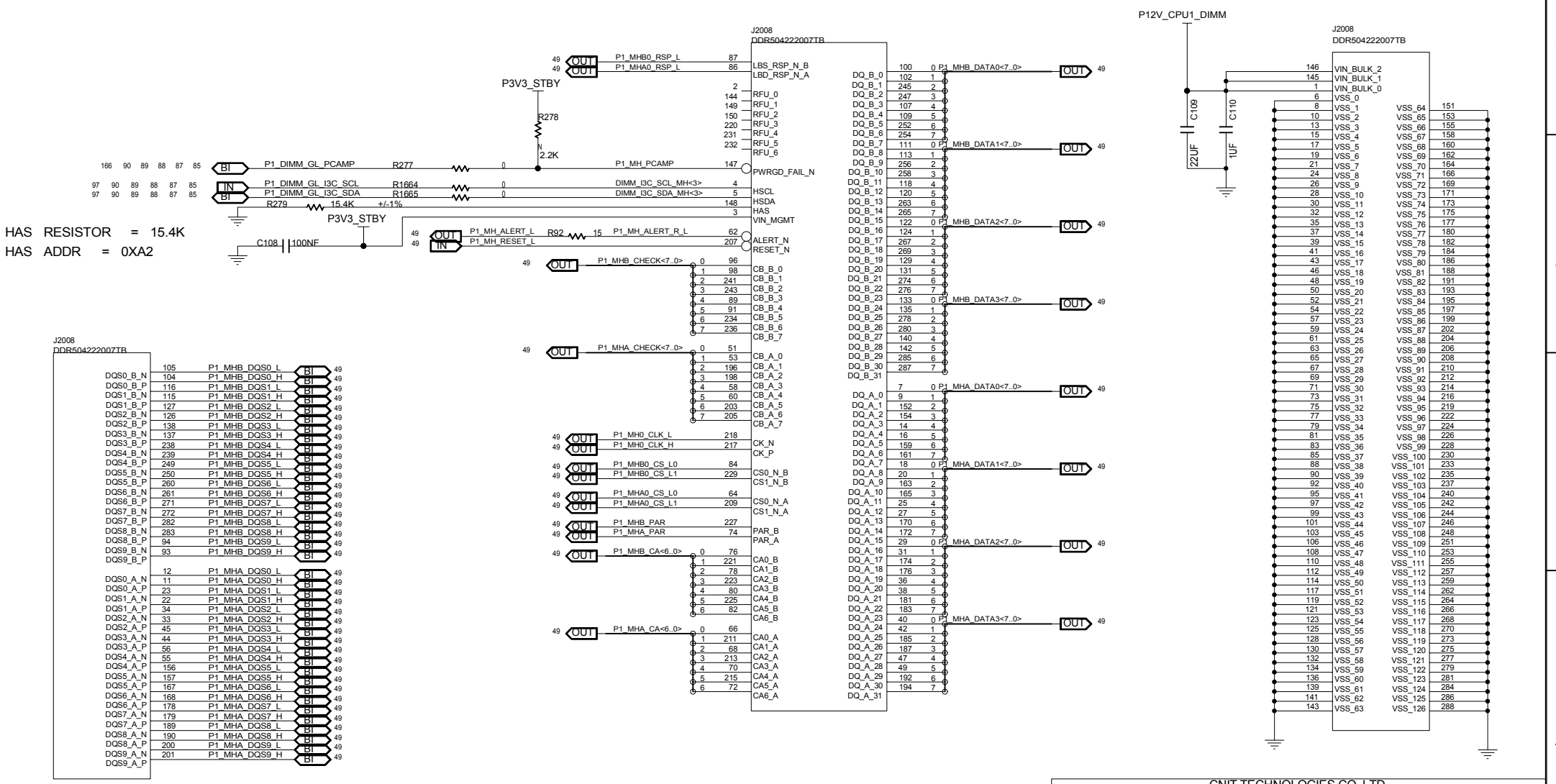

MODULE=---

FUNCTION=---

CNIT TECHNOLOGIES CO.,LTD.				
BOARD NAME MB-CADT24D_VERA			DRAWINGNO CNIT0302K1XKDL	
DESIGNED	yujianjiang00259	DATE <DATE_DN>	SHEET 80 OF 200	REV
REVIEWED	<REVIEWED>	DATE <DATE_RW>	Mon Sep 01 14:12:00 2025	

THIS DOCUMENT AND THE TECHNICAL DATA DISCLOSED ARE PROPRIETARY TO CNIT TECHNOLOGIES CO., LTD. AND SHALL NOT BE DUPLICATED USED RELEASED OR DISCLOSED WITHOUT EXPRESSING WRITTEN PERMISSION.

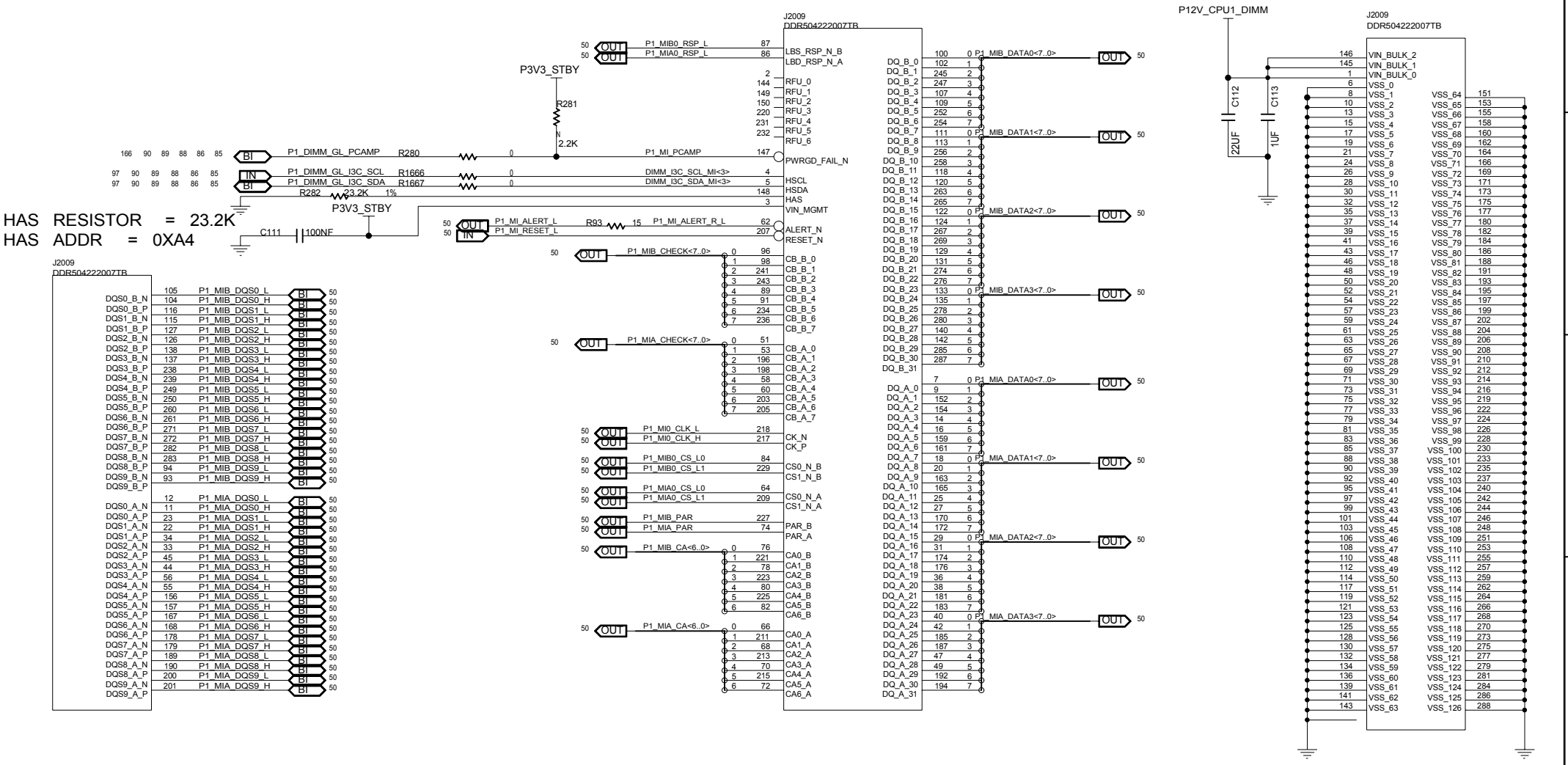

MODULE=---

FUNCTION=---

CNIT TECHNOLOGIES CO.,LTD.				
BOARD NAME	MB-CADT24D_VERA		DRAWINGNO	CNIT0302K1XKDL
DESIGNED	yujianjiang00259	DATE <DATE_DN>	SHEET 81 OF 200	REV
REVIEWED	<REVIEWED>	DATE <DATE_RW>	Mon Sep 01 14:12:03 2025	

THIS DOCUMENT AND THE TECHNICAL DATA DISCLOSED ARE PROPRIETARY TO CNIT TECHNOLOGIES CO., LTD. AND SHALL NOT BE DUPLICATED USED RELEASED OR DISCLOSED WITHOUT EXPRESSING WRITTEN PERMISSION.

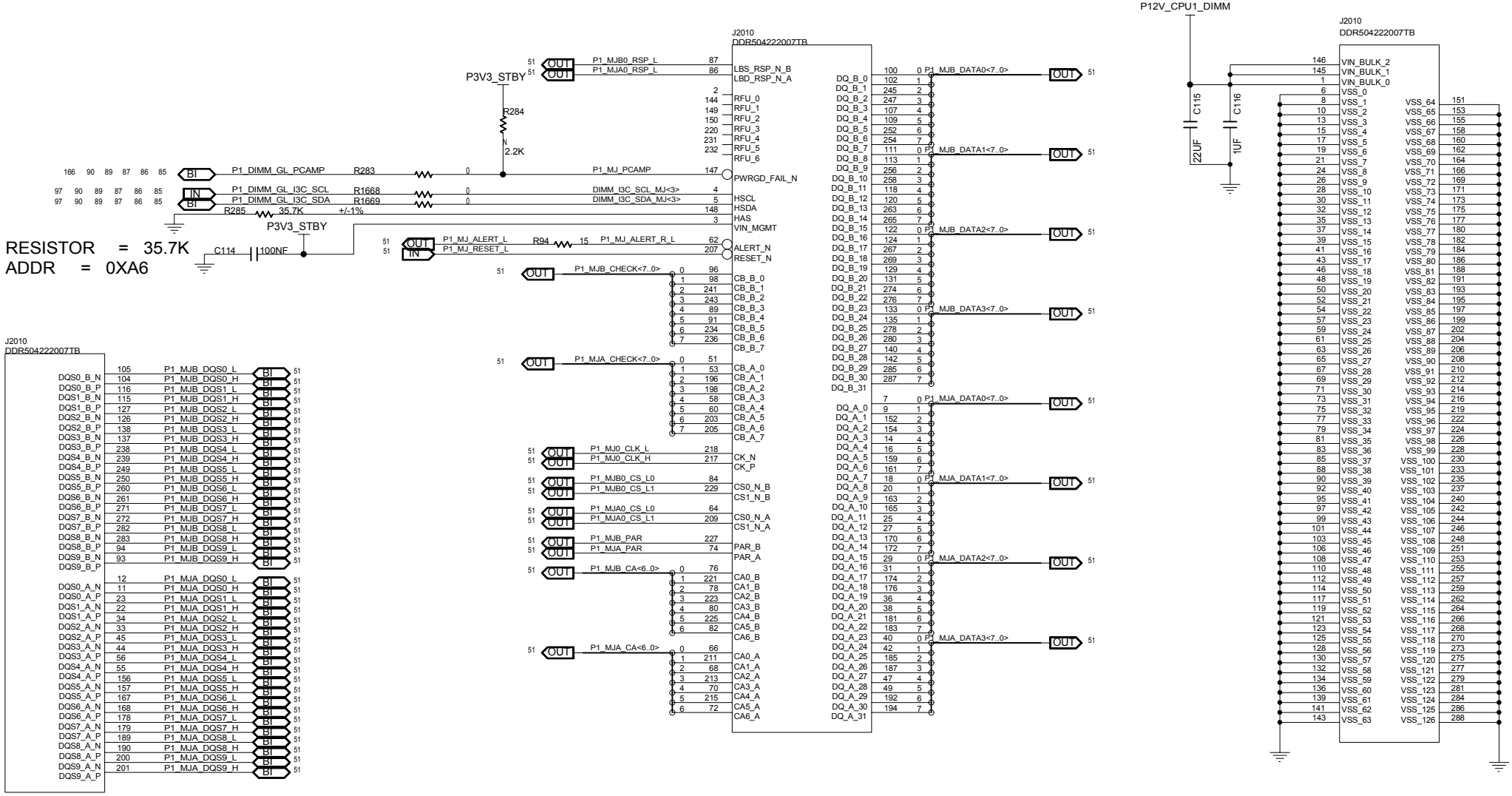

HAS RESISTOR = 35.7K
HAS ADDR = 0XA6

MODULE=---
FUNCTION=---

CNIT TECHNOLOGIES CO.,LTD.				
BOARD NAME MB-CADT24D_VERA			DRAWINGNO CNIT0302K1XKDL	
DESIGNED	yujianjiang00259	DATE <DATE_DN>	SHEET 82 OF 200	REV
REVIEWED	<REVIEWED>	DATE <DATE_RW>	Mon Sep 01 14:12:05 2025	

THIS DOCUMENT AND THE TECHNICAL DATA DISCLOSED ARE PROPRIETARY TO CNIT TECHNOLOGIES CO., LTD. AND SHALL NOT BE DUPLICATED USED RELEASED OR DISCLOSED WITHOUT EXPRESSING WRITTEN PERMISSION.

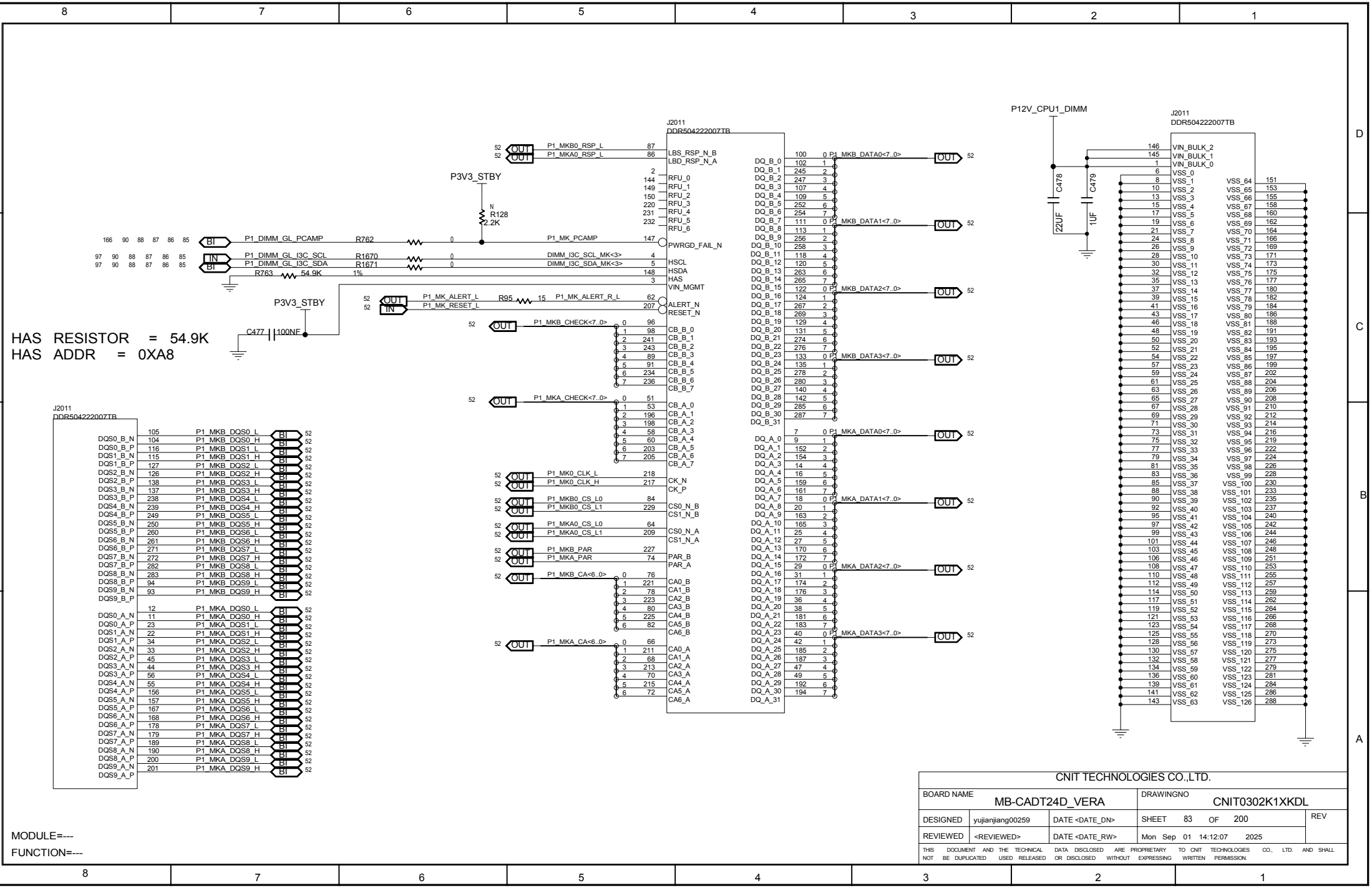
J2011
DDR504222007TB
P1_MKB0_RSP_L
P1_MKA0_RSP_L
LBS_RSP_N_B
LBD_RSP_N_A
P3V3_STBY
R128
2.2K
RFU_0
RFU_1
RFU_2
RFU_3
RFU_4
RFU_5
RFU_6
P1_DIMM_GL_PCAMP
R762
P1_MK_PCAMP
PWRGD_FAIL_N
P1_DIMM_GL_I3C_SCL
R1670
DIMM_I3C_SCL_MK<3>
HSCL
P1_DIMM_GL_I3C_SDA
R1671
DIMM_I3C_SDA_MK<3>
HSDA
R763
54.9K
HAS
VIN_MGMT
P1_MK_ALERT_L
R95
P1_MK_ALERT_R_L
ALERT_N
P1_MK_RESET_L
RESET_N
C477
100NF
HAS RESISTOR = 54.9K
HAS ADDR = 0XA8
P1_MKB_CHECK<7..0>
CB_B_0
CB_B_1
CB_B_2
CB_B_3
CB_B_4
CB_B_5
CB_B_6
CB_B_7
P1_MKA_CHECK<7..0>
CB_A_0
CB_A_1
CB_A_2
CB_A_3
CB_A_4
CB_A_5
CB_A_6
CB_A_7
P1_MK0_CLK_L
P1_MK0_CLK_H
CK_N
CK_P
P1_MKB0_CS_L0
P1_MKB0_CS_L1
CS0_N_B
CS1_N_B
P1_MKA0_CS_L0
P1_MKA0_CS_L1
CS0_N_A
CS1_N_A
P1_MKB_PAR
P1_MKA_PAR
PAR_B
PAR_A
P1_MKB_CA<6..0>
CA0_B
CA1_B
CA2_B
CA3_B
CA4_B
CA5_B
CA6_B
P1_MKA_CA<6..0>
CA0_A
CA1_A
CA2_A
CA3_A
CA4_A
CA5_A
CA6_A
DQ_B_0
DQ_B_1
DQ_B_2
DQ_B_3
DQ_B_4
DQ_B_5
DQ_B_6
DQ_B_7
DQ_B_8
DQ_B_9
DQ_B_10
DQ_B_11
DQ_B_12
DQ_B_13
DQ_B_14
DQ_B_15
DQ_B_16
DQ_B_17
DQ_B_18
DQ_B_19
DQ_B_20
DQ_B_21
DQ_B_22
DQ_B_23
DQ_B_24
DQ_B_25
DQ_B_26
DQ_B_27
DQ_B_28
DQ_B_29
DQ_B_30
DQ_B_31
DQ_A_0
DQ_A_1
DQ_A_2
DQ_A_3
DQ_A_4
DQ_A_5
DQ_A_6
DQ_A_7
DQ_A_8
DQ_A_9
DQ_A_10
DQ_A_11
DQ_A_12
DQ_A_13
DQ_A_14
DQ_A_15
DQ_A_16
DQ_A_17
DQ_A_18
DQ_A_19
DQ_A_20
DQ_A_21
DQ_A_22
DQ_A_23
DQ_A_24
DQ_A_25
DQ_A_26
DQ_A_27
DQ_A_28
DQ_A_29
DQ_A_30
DQ_A_31
P1_MKB_DATA0<7..0>
P1_MKB_DATA1<7..0>
P1_MKB_DATA2<7..0>
P1_MKB_DATA3<7..0>
P1_MKA_DATA0<7..0>
P1_MKA_DATA1<7..0>
P1_MKA_DATA2<7..0>
P1_MKA_DATA3<7..0>
P12V_CPU1_DIMM
C478
22UF
C479
1UF
VIN_BULK_2
VIN_BULK_1
VIN_BULK_0
VSS_0
VSS_1
VSS_2
VSS_3
VSS_4
VSS_5
VSS_6
VSS_7
VSS_8
VSS_9
VSS_10
VSS_11
VSS_12
VSS_13
VSS_14
VSS_15
VSS_16
VSS_17
VSS_18
VSS_19
VSS_20
VSS_21
VSS_22
VSS_23
VSS_24
VSS_25
VSS_26
VSS_27
VSS_28
VSS_29
VSS_30
VSS_31
VSS_32
VSS_33
VSS_34
VSS_35
VSS_36
VSS_37
VSS_38
VSS_39
VSS_40
VSS_41
VSS_42
VSS_43
VSS_44
VSS_45
VSS_46
VSS_47
VSS_48
VSS_49
VSS_50
VSS_51
VSS_52
VSS_53
VSS_54
VSS_55
VSS_56
VSS_57
VSS_58
VSS_59
VSS_60
VSS_61
VSS_62
VSS_63
VSS_64
VSS_65
VSS_66
VSS_67
VSS_68
VSS_69
VSS_70
VSS_71
VSS_72
VSS_73
VSS_74
VSS_75
VSS_76
VSS_77
VSS_78
VSS_79
VSS_80
VSS_81
VSS_82
VSS_83
VSS_84
VSS_85
VSS_86
VSS_87
VSS_88
VSS_89
VSS_90
VSS_91
VSS_92
VSS_93
VSS_94
VSS_95
VSS_96
VSS_97
VSS_98
VSS_99
VSS_100
VSS_101
VSS_102
VSS_103
VSS_104
VSS_105
VSS_106
VSS_107
VSS_108
VSS_109
VSS_110
VSS_111
VSS_112
VSS_113
VSS_114
VSS_115
VSS_116
VSS_117
VSS_118
VSS_119
VSS_120
VSS_121
VSS_122
VSS_123
VSS_124
VSS_125
VSS_126
DQS0_B_N
DQS0_B_P
DQS1_B_N
DQS1_B_P
DQS2_B_N
DQS2_B_P
DQS3_B_N
DQS3_B_P
DQS4_B_N
DQS4_B_P
DQS5_B_N
DQS5_B_P
DQS6_B_N
DQS6_B_P
DQS7_B_N
DQS7_B_P
DQS8_B_N
DQS8_B_P
DQS9_B_N
DQS9_B_P
P1_MKB_DQS0_L
P1_MKB_DQS0_H
P1_MKB_DQS1_L
P1_MKB_DQS1_H
P1_MKB_DQS2_L
P1_MKB_DQS2_H
P1_MKB_DQS3_L
P1_MKB_DQS3_H
P1_MKB_DQS4_L
P1_MKB_DQS4_H
P1_MKB_DQS5_L
P1_MKB_DQS5_H
P1_MKB_DQS6_L
P1_MKB_DQS6_H
P1_MKB_DQS7_L
P1_MKB_DQS7_H
P1_MKB_DQS8_L
P1_MKB_DQS8_H
P1_MKB_DQS9_L
P1_MKB_DQS9_H
DQS0_A_N
DQS0_A_P
DQS1_A_N
DQS1_A_P
DQS2_A_N
DQS2_A_P
DQS3_A_N
DQS3_A_P
DQS4_A_N
DQS4_A_P
DQS5_A_N
DQS5_A_P
DQS6_A_N
DQS6_A_P
DQS7_A_N
DQS7_A_P
DQS8_A_N
DQS8_A_P
DQS9_A_N
DQS9_A_P
P1_MKA_DQS0_L
P1_MKA_DQS0_H
P1_MKA_DQS1_L
P1_MKA_DQS1_H
P1_MKA_DQS2_L
P1_MKA_DQS2_H
P1_MKA_DQS3_L
P1_MKA_DQS3_H
P1_MKA_DQS4_L
P1_MKA_DQS4_H
P1_MKA_DQS5_L
P1_MKA_DQS5_H
P1_MKA_DQS6_L
P1_MKA_DQS6_H
P1_MKA_DQS7_L
P1_MKA_DQS7_H
P1_MKA_DQS8_L
P1_MKA_DQS8_H
P1_MKA_DQS9_L
P1_MKA_DQS9_H
MODULE=---
FUNCTION=---
CNIT TECHNOLOGIES CO.,LTD.
BOARD NAME
MB-CADT24D_VERA
DRAWINGNO
CNIT0302K1XKDL
DESIGNED
yujianjiang00259
DATE <DATE_DN>
SHEET 83 OF 200
REV
REVIEWED
<REVIEWED>
DATE <DATE_RW>
Mon Sep 01 14:12:07 2025
THIS DOCUMENT AND THE TECHNICAL DATA DISCLOSED ARE PROPRIETARY TO CNIT TECHNOLOGIES CO., LTD. AND SHALL NOT BE DUPLICATED USED RELEASED OR DISCLOSED WITHOUT EXPRESSING WRITTEN PERMISSION.

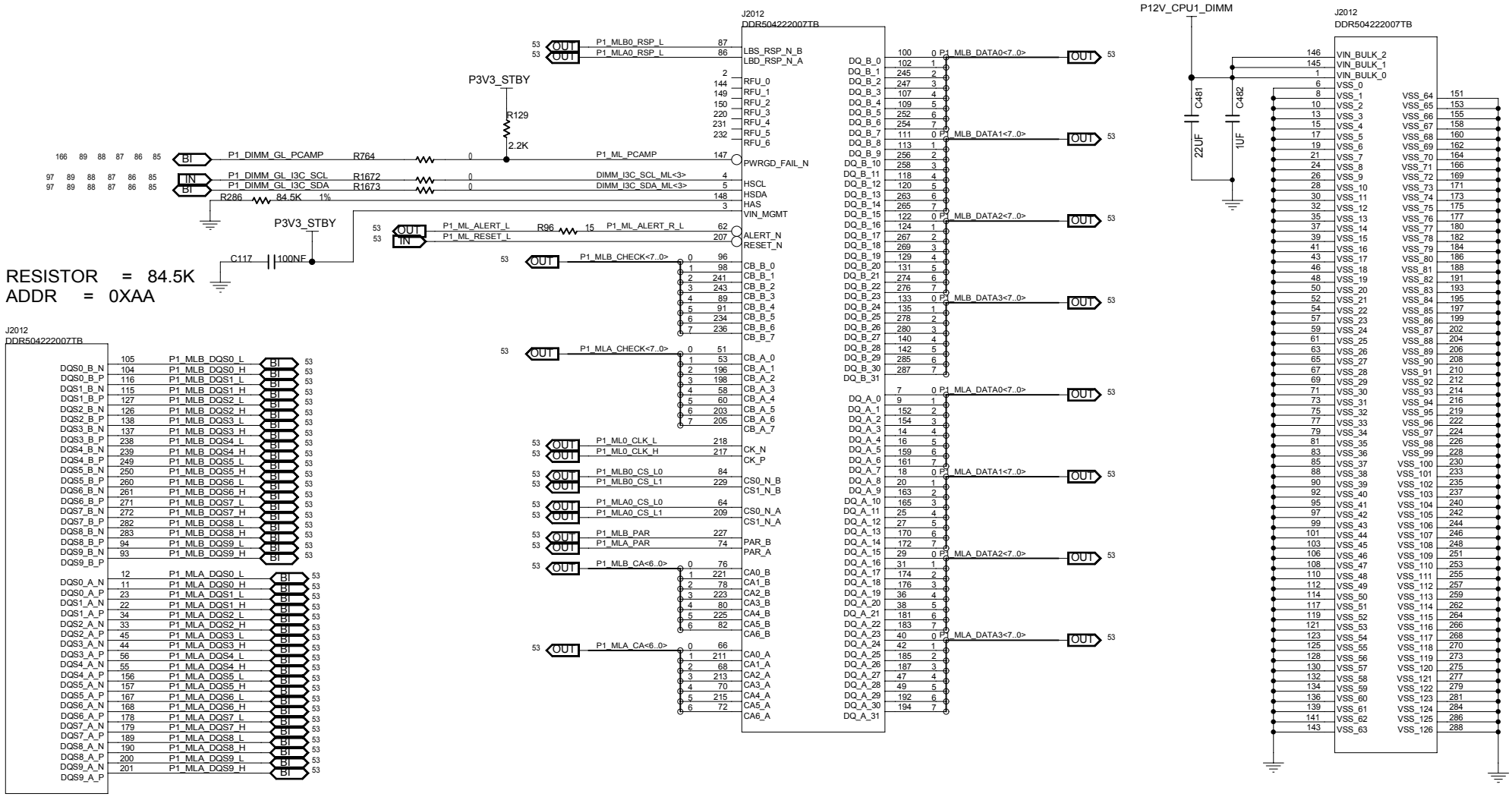

MODULE=---

FUNCTION=---

CNIT TECHNOLOGIES CO.,LTD.				
BOARD NAME MB-CADT24D_VERA			DRAWINGNO CNIT0302K1XKDL	
DESIGNED	yujianjiang00259	DATE <DATE_DN>	SHEET 84 OF 200	REV
REVIEWED	<REVIEWED>	DATE <DATE_RW>	Fri Aug 29 11:21:16 2025	

THIS DOCUMENT AND THE TECHNICAL DATA DISCLOSED ARE PROPRIETARY TO CNIT TECHNOLOGIES CO., LTD. AND SHALL NOT BE DUPLICATED USED RELEASED OR DISCLOSED WITHOUT EXPRESSING WRITTEN PERMISSION.

CPU0 CORE0

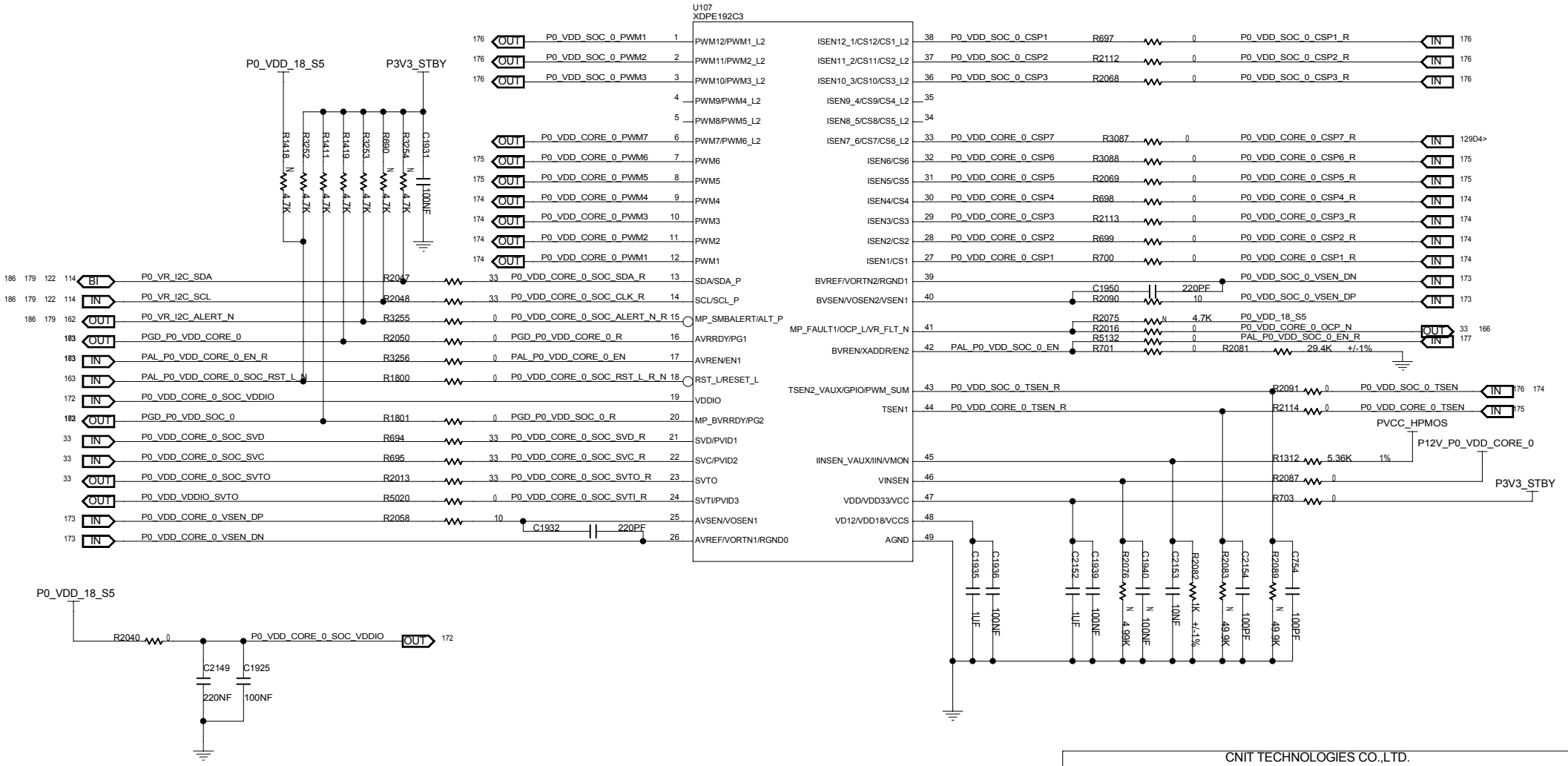

MODULE=---

FUNCTION=---

CNIT TECHNOLOGIES CO.,LTD.				
BOARD NAME MB-CADT24D_VERA			DRAWINGNO CNIT0302K1XKDL	
DESIGNED	yujianjiang00259	DATE <DATE_DN>	SHEET 85 OF 200	REV
REVIEWED	<REVIEWED>	DATE <DATE_RW>	Thu Sep 04 14:35:25 2025	

THIS DOCUMENT AND THE TECHNICAL DATA DISCLOSED ARE PROPRIETARY TO CNIT TECHNOLOGIES CO., LTD. AND SHALL NOT BE DUPLICATED USED RELEASED OR DISCLOSED WITHOUT EXPRESSING WRITTEN PERMISSION.

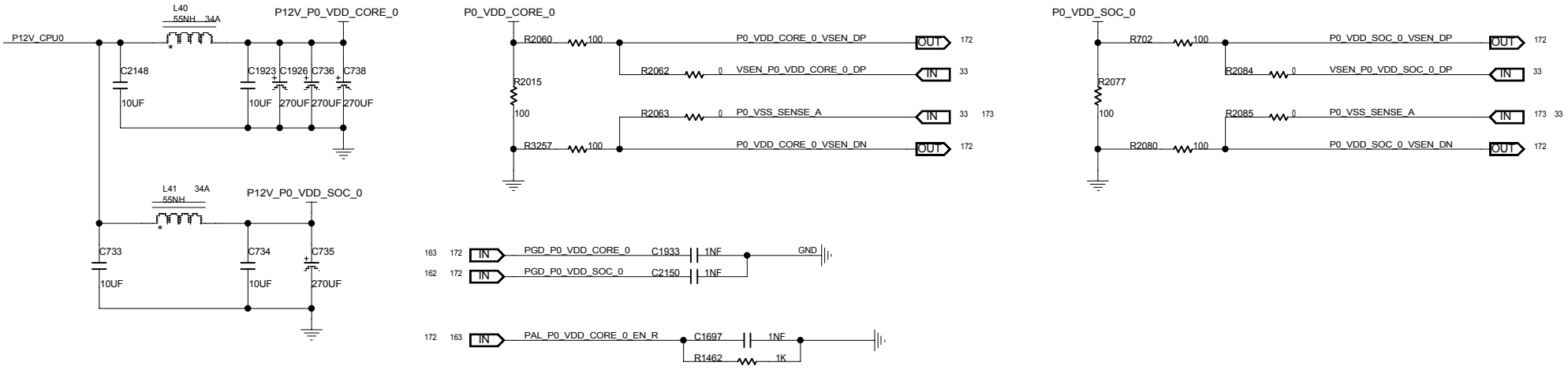

MODULE=---

FUNCTION=---

CNIT TECHNOLOGIES CO.,LTD.				
BOARD NAME MB-CADT24D_VERA			DRAWINGNO CNIT0302K1XKDL	
DESIGNED	yujianjiang00259	DATE <DATE_DN>	SHEET 86 OF 200	REV
REVIEWED	<REVIEWED>	DATE <DATE_RW>	Sat Sep 13 15:10:14 2025	

THIS DOCUMENT AND THE TECHNICAL DATA DISCLOSED ARE PROPRIETARY TO CNIT TECHNOLOGIES CO., LTD. AND SHALL NOT BE DUPLICATED USED RELEASED OR DISCLOSED WITHOUT EXPRESSING WRITTEN PERMISSION.

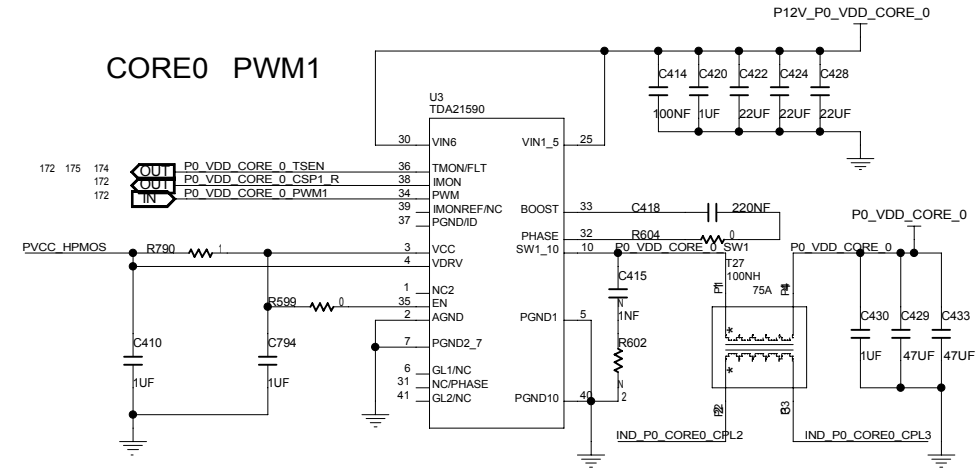

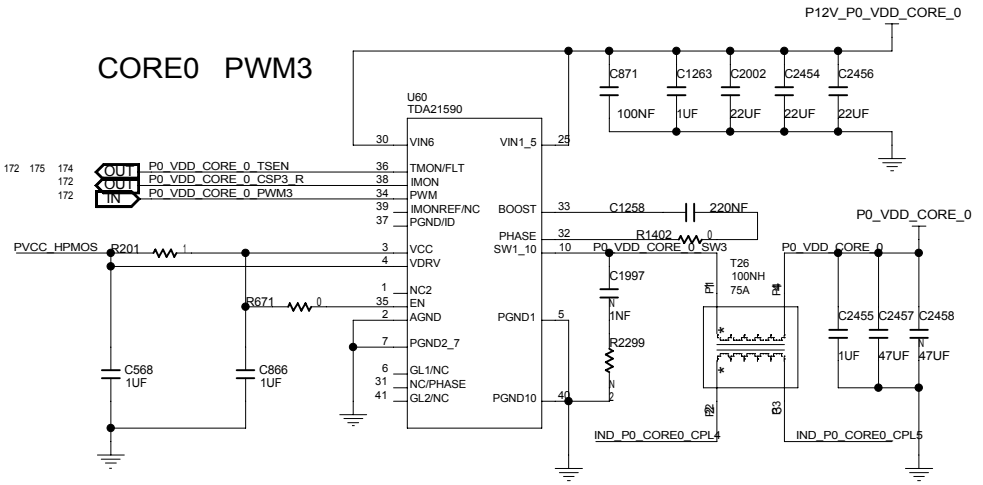

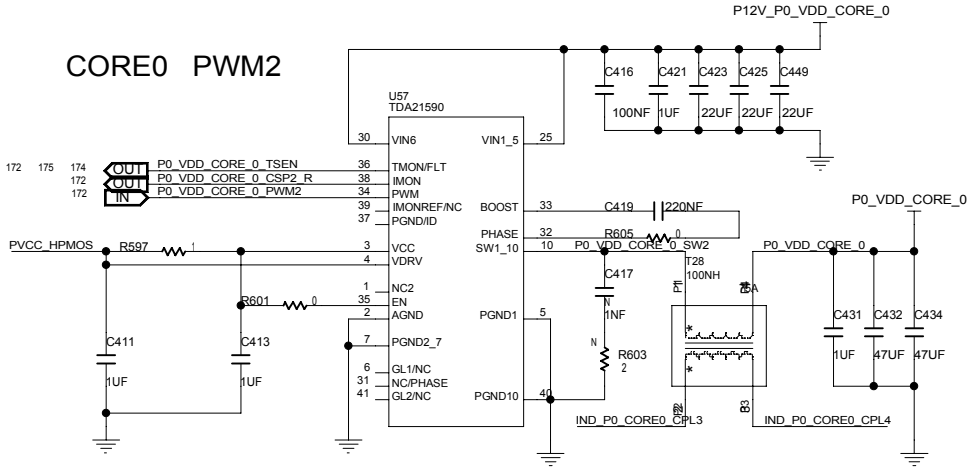

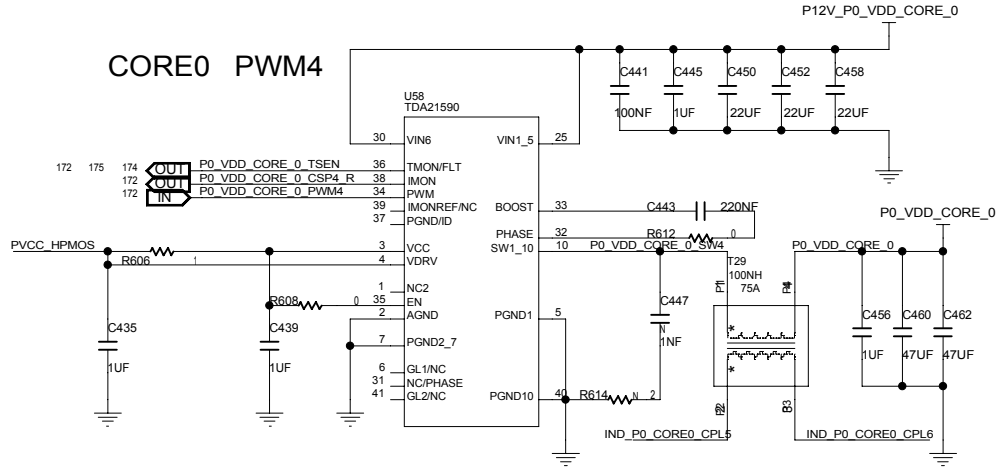

MODULE=---

FUNCTION=---

CNIT TECHNOLOGIES CO.,LTD.				
BOARD NAME MB-CADT24D_VERA			DRAWINGNO CNIT0302K1XKDL	
DESIGNED	yujianjiang00259	DATE <DATE_DN>	SHEET 87 OF 200	REV
REVIEWED	<REVIEWED>	DATE <DATE_RW>	Thu Sep 04 14:35:23 2025	

THIS DOCUMENT AND THE TECHNICAL DATA DISCLOSED ARE PROPRIETARY TO CNIT TECHNOLOGIES CO., LTD. AND SHALL NOT BE DUPLICATED USED RELEASED OR DISCLOSED WITHOUT EXPRESSING WRITTEN PERMISSION.

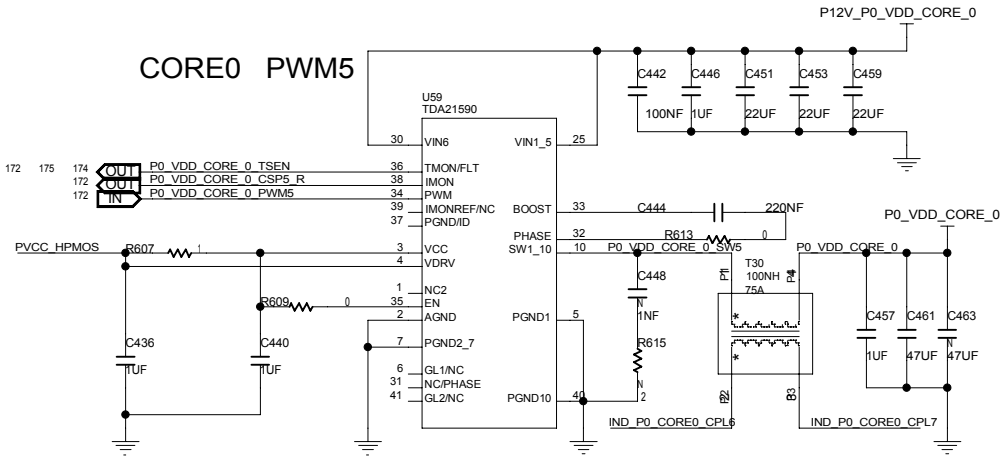

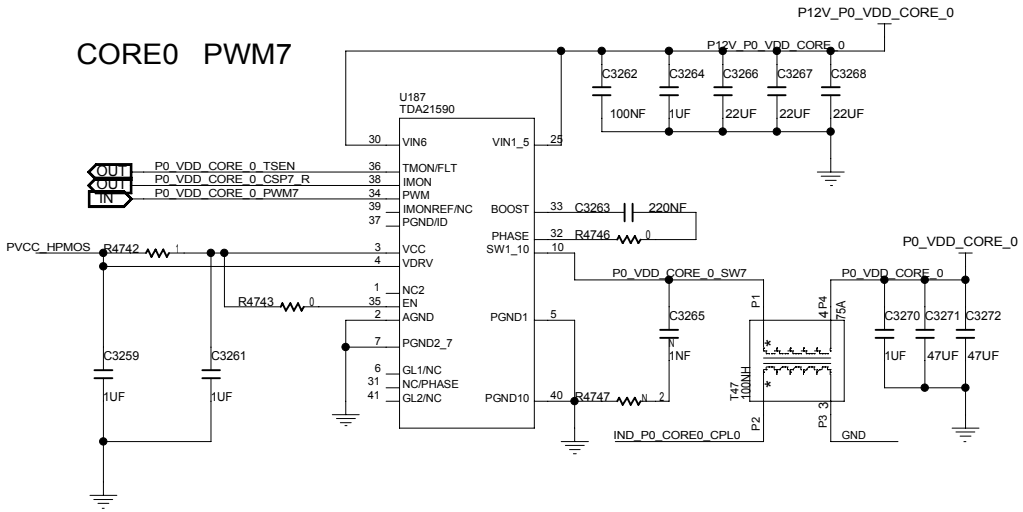

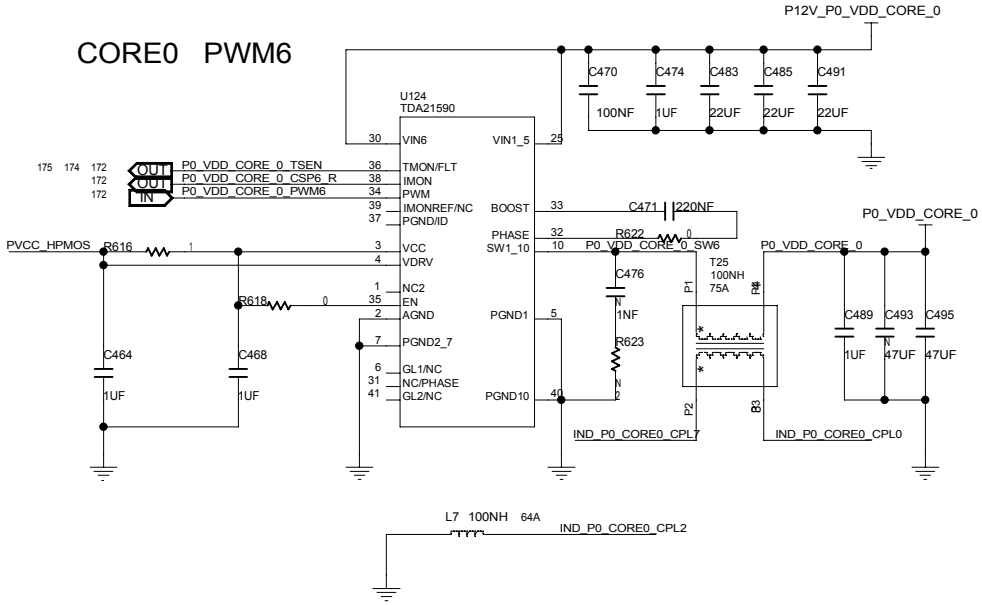

MODULE=---

FUNCTION=---

CNIT TECHNOLOGIES CO.,LTD.				
BOARD NAME MB-CADT24D_VERA			DRAWINGNO CNIT0302K1XKDL	
DESIGNED	yujianjiang00259	DATE <DATE_DN>	SHEET 88 OF 200	REV
REVIEWED	<REVIEWED>	DATE <DATE_RW>	Thu Sep 04 14:35:21 2025	

THIS DOCUMENT AND THE TECHNICAL DATA DISCLOSED ARE PROPRIETARY TO CNIT TECHNOLOGIES CO., LTD. AND SHALL NOT BE DUPLICATED USED RELEASED OR DISCLOSED WITHOUT EXPRESSING WRITTEN PERMISSION.

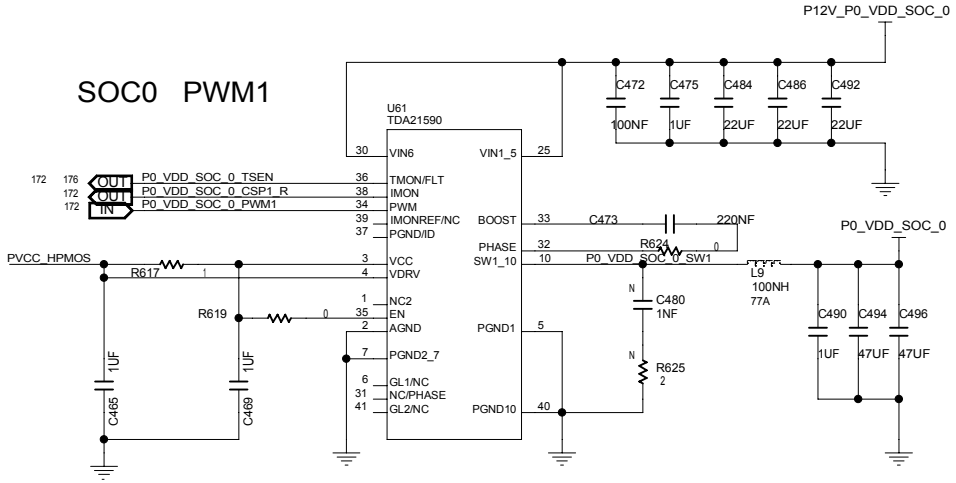

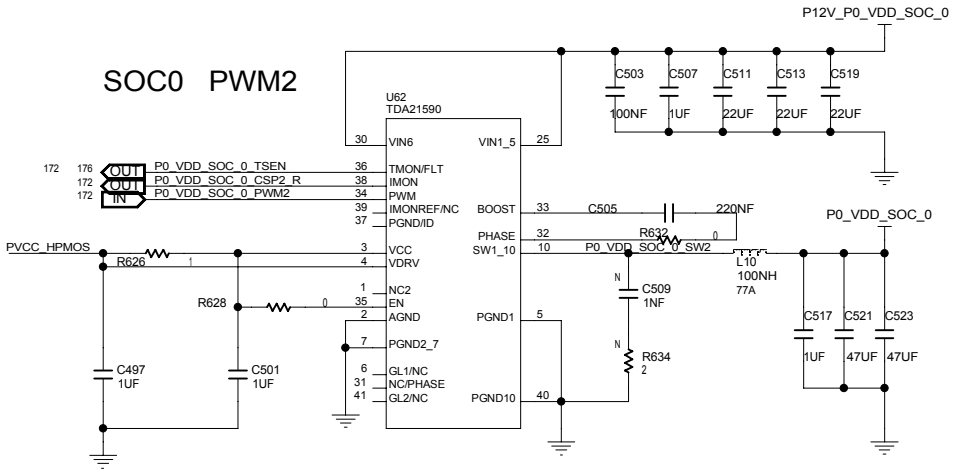

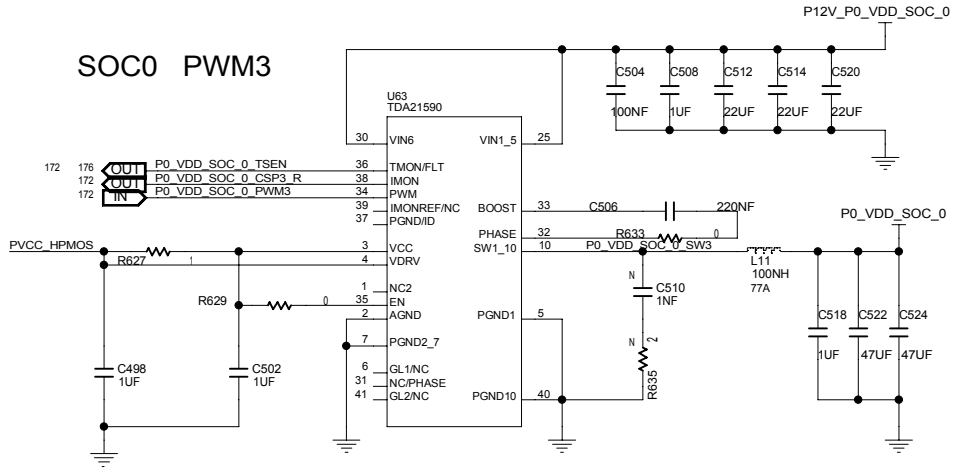

MODULE=---

FUNCTION=---

CNIT TECHNOLOGIES CO.,LTD.				
BOARD NAME MB-CADT24D_VERA			DRAWINGNO CNIT0302K1XKDL	
DESIGNED	yujianjiang00259	DATE <DATE_DN>	SHEET 89 OF 200	REV
REVIEWED	<REVIEWED>	DATE <DATE_RW>	Thu Sep 04 14:35:23 2025	

THIS DOCUMENT AND THE TECHNICAL DATA DISCLOSED ARE PROPRIETARY TO CNIT TECHNOLOGIES CO., LTD. AND SHALL NOT BE DUPLICATED USED RELEASED OR DISCLOSED WITHOUT EXPRESSING WRITTEN PERMISSION.

CPU0 CORE0

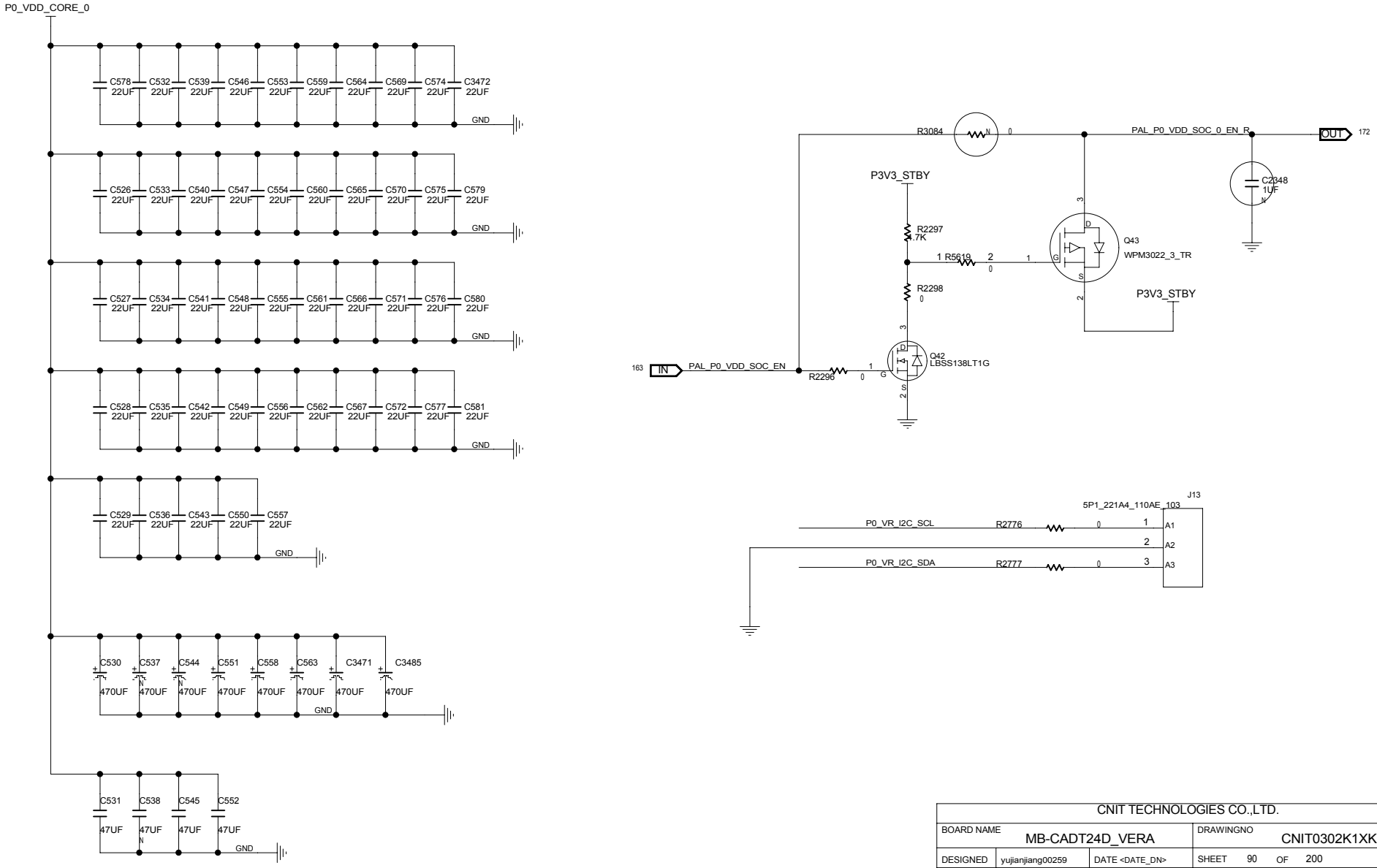

MODULE=---

FUNCTION=---

CNIT TECHNOLOGIES CO.,LTD.				
BOARD NAME MB-CADT24D_VERA			DRAWINGNO CNIT0302K1XKDL	
DESIGNED	yujianjiang00259	DATE <DATE_DN>	SHEET 90 OF 200	REV
REVIEWED	<REVIEWED>	DATE <DATE_RW>	Sat Sep 13 15:10:14 2025	

THIS DOCUMENT AND THE TECHNICAL DATA DISCLOSED ARE PROPRIETARY TO CNIT TECHNOLOGIES CO., LTD. AND SHALL NOT BE DUPLICATED USED RELEASED OR DISCLOSED WITHOUT EXPRESSING WRITTEN PERMISSION.

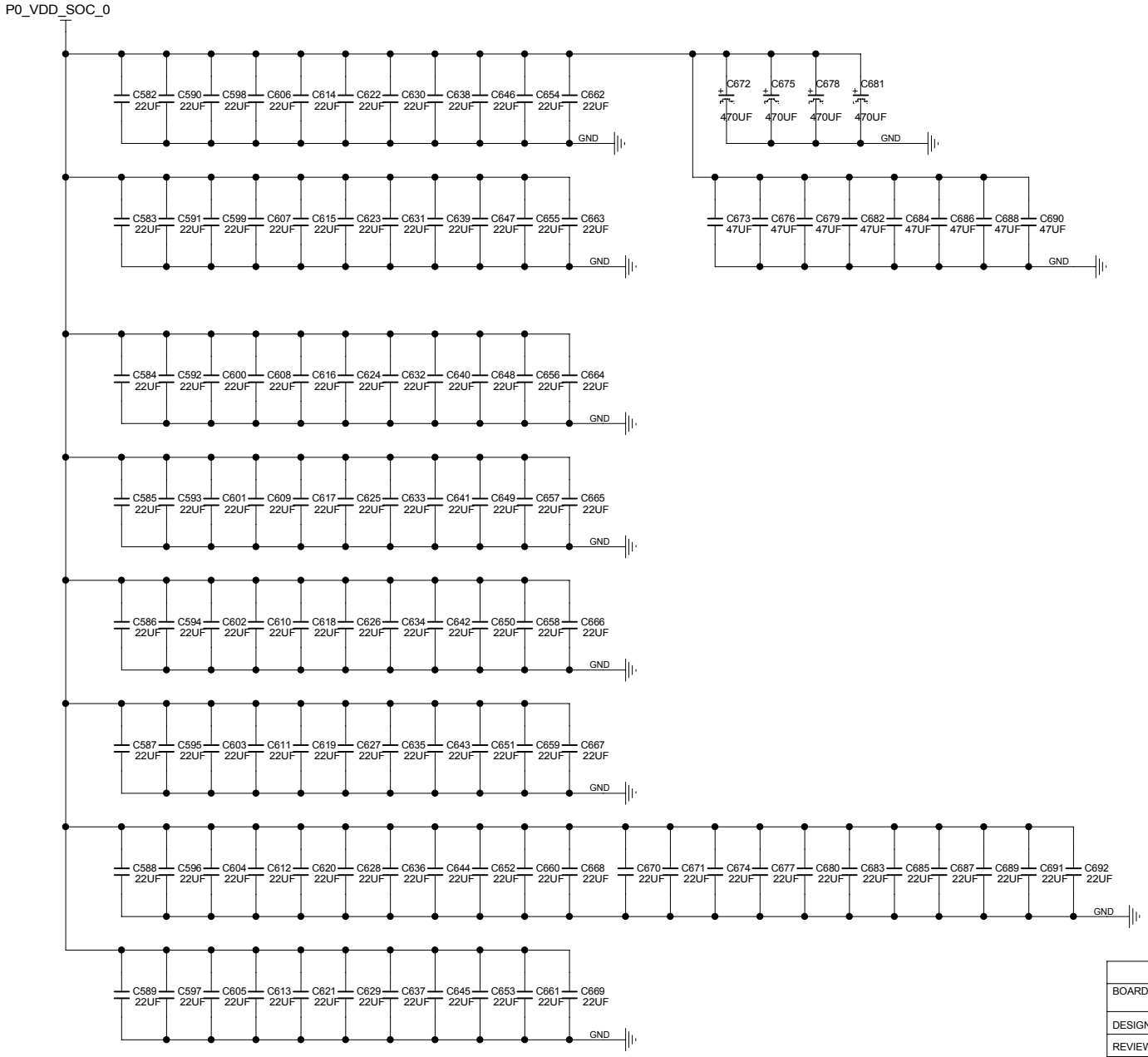

MODULE=---

FUNCTION=---

CNIT TECHNOLOGIES CO.,LTD.				
BOARD NAME MB-CADT24D_VERA			DRAWINGNO CNIT0302K1XKDL	
DESIGNED	yujianjiang00259	DATE <DATE_DN>	SHEET 91 OF 200	REV
REVIEWED	<REVIEWED>	DATE <DATE_RW>	Sat Sep 13 15:10:16 2025	

THIS DOCUMENT AND THE TECHNICAL DATA DISCLOSED ARE PROPRIETARY TO CNIT TECHNOLOGIES CO., LTD. AND SHALL NOT BE DUPLICATED USED RELEASED OR DISCLOSED WITHOUT EXPRESSING WRITTEN PERMISSION.

CPU0 CORE1

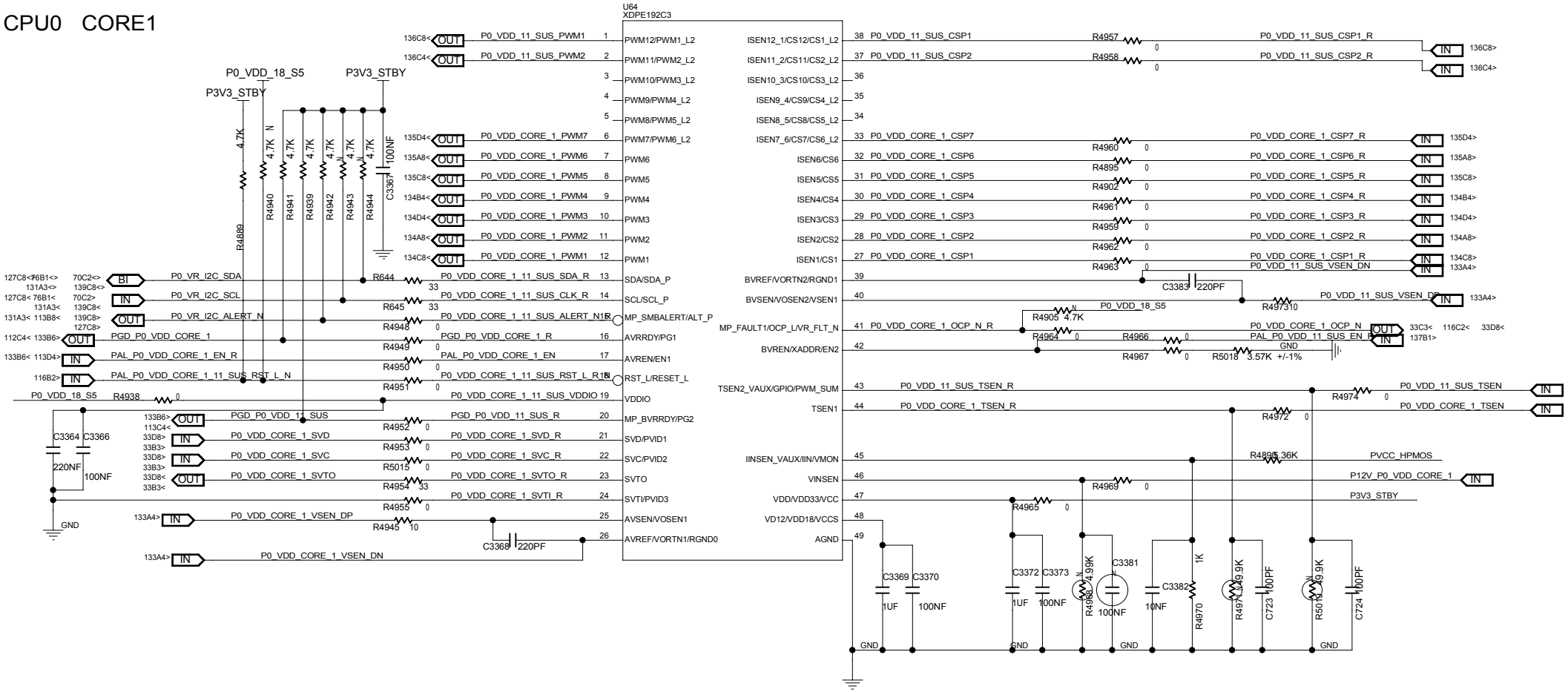

MODULE=---

FUNCTION=---

CNIT TECHNOLOGIES CO.,LTD.				
BOARD NAME MB-CADT24D_VERA			DRAWINGNO CNIT0302K1XKDL	
DESIGNED	yujianjiang00259	DATE <DATE_DN>	SHEET 92 OF 200	REV
REVIEWED	<REVIEWED>	DATE <DATE_RW>	Thu Sep 04 11:43:53 2025	

THIS DOCUMENT AND THE TECHNICAL DATA DISCLOSED ARE PROPRIETARY TO CNIT TECHNOLOGIES CO., LTD. AND SHALL NOT BE DUPLICATED USED RELEASED OR DISCLOSED WITHOUT EXPRESSING WRITTEN PERMISSION.

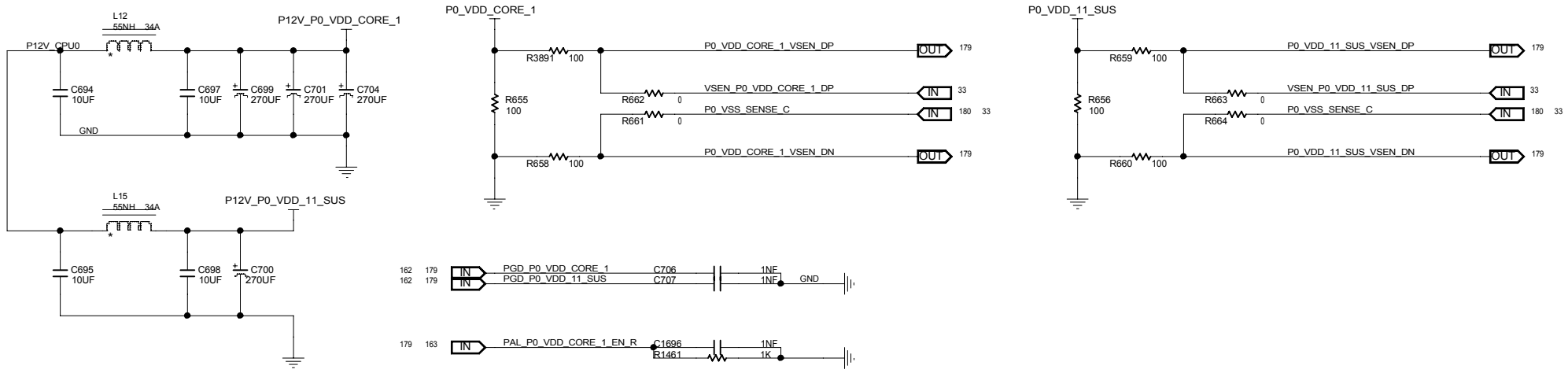

MODULE=---

FUNCTION=---

CNIT TECHNOLOGIES CO.,LTD.				
BOARD NAME MB-CADT24D_VERA			DRAWINGNO CNIT0302K1XKDL	
DESIGNED	yujianjiang00259	DATE <DATE_DN>	SHEET 93 OF 200	REV
REVIEWED	<REVIEWED>	DATE <DATE_RW>	Sat Sep 13 15:10:18 2025	

THIS DOCUMENT AND THE TECHNICAL DATA DISCLOSED ARE PROPRIETARY TO CNIT TECHNOLOGIES CO., LTD. AND SHALL NOT BE DUPLICATED USED RELEASED OR DISCLOSED WITHOUT EXPRESSING WRITTEN PERMISSION.

CPU0 CORE1

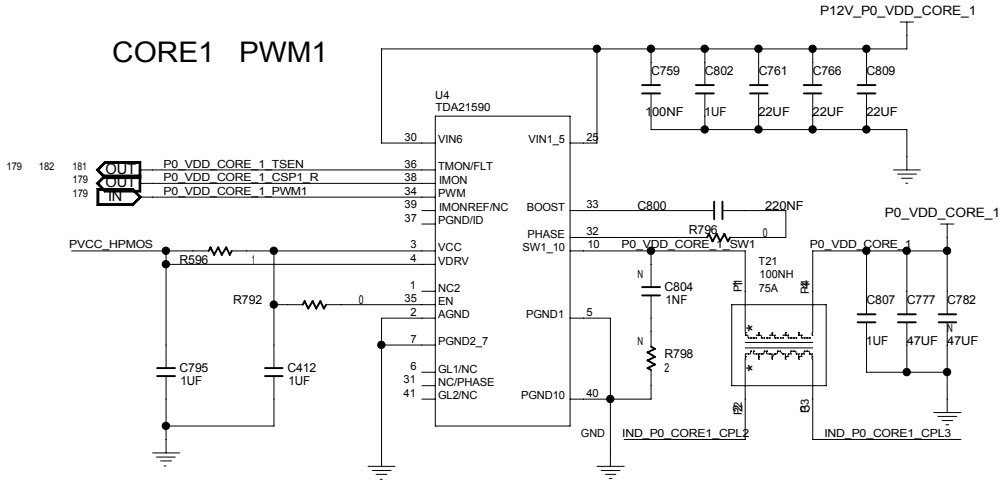

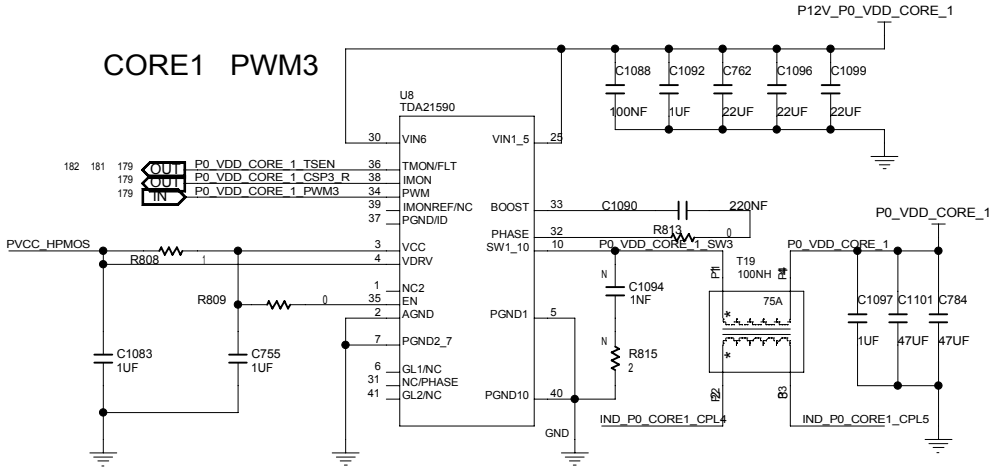

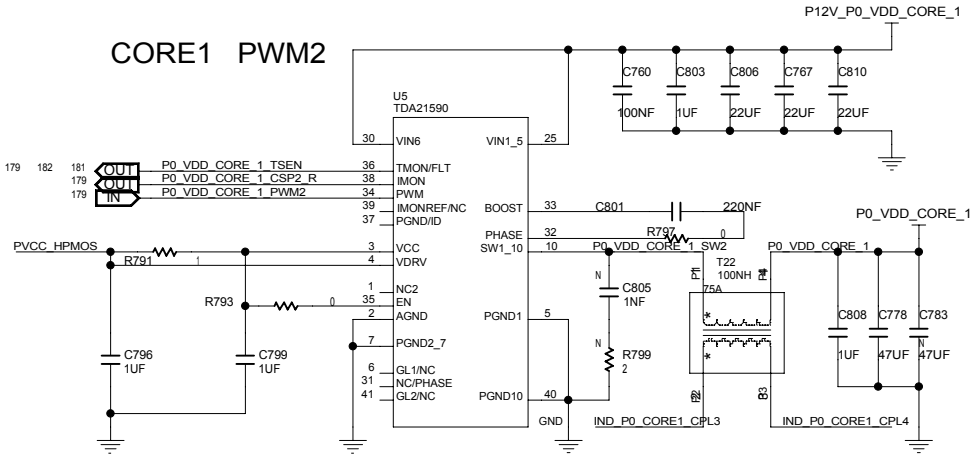

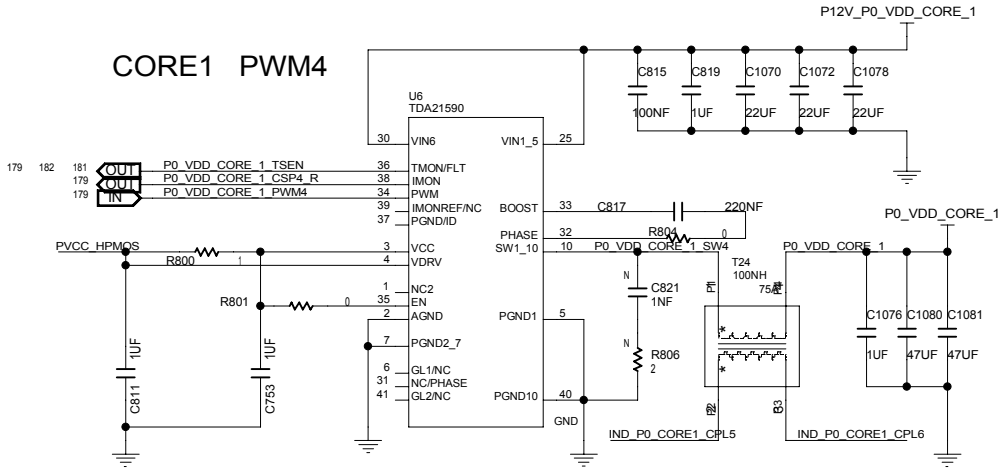

MODULE=---

FUNCTION=---

CNIT TECHNOLOGIES CO.,LTD.				
BOARD NAME MB-CADT24D_VERA			DRAWINGNO CNIT0302K1XKDL	
DESIGNED	yujianjiang00259	DATE <DATE_DN>	SHEET 94 OF 200	REV
REVIEWED	<REVIEWED>	DATE <DATE_RW>	Thu Sep 04 11:19:16 2025	

THIS DOCUMENT AND THE TECHNICAL DATA DISCLOSED ARE PROPRIETARY TO CNIT TECHNOLOGIES CO., LTD. AND SHALL NOT BE DUPLICATED USED RELEASED OR DISCLOSED WITHOUT EXPRESSING WRITTEN PERMISSION.

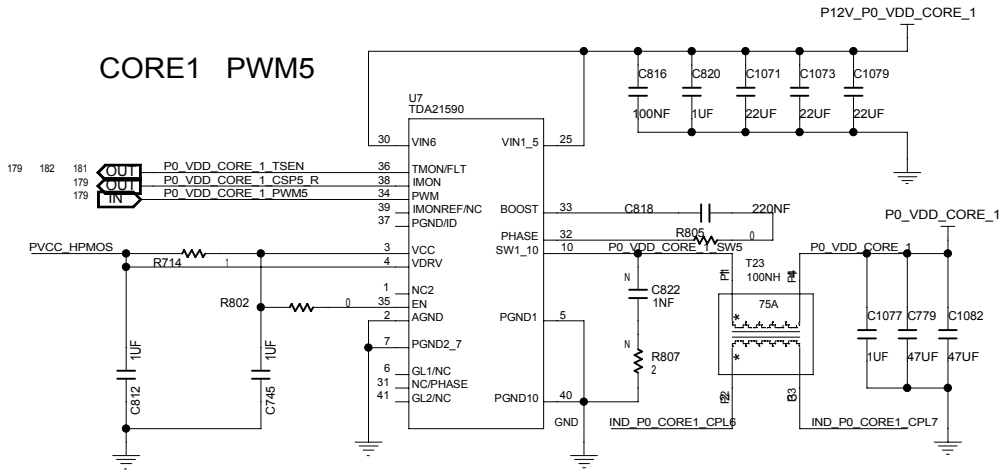

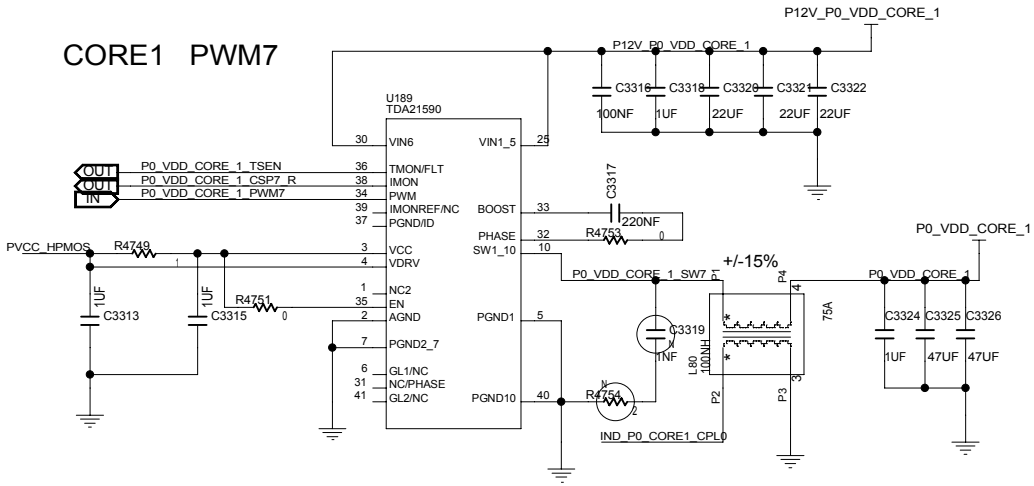

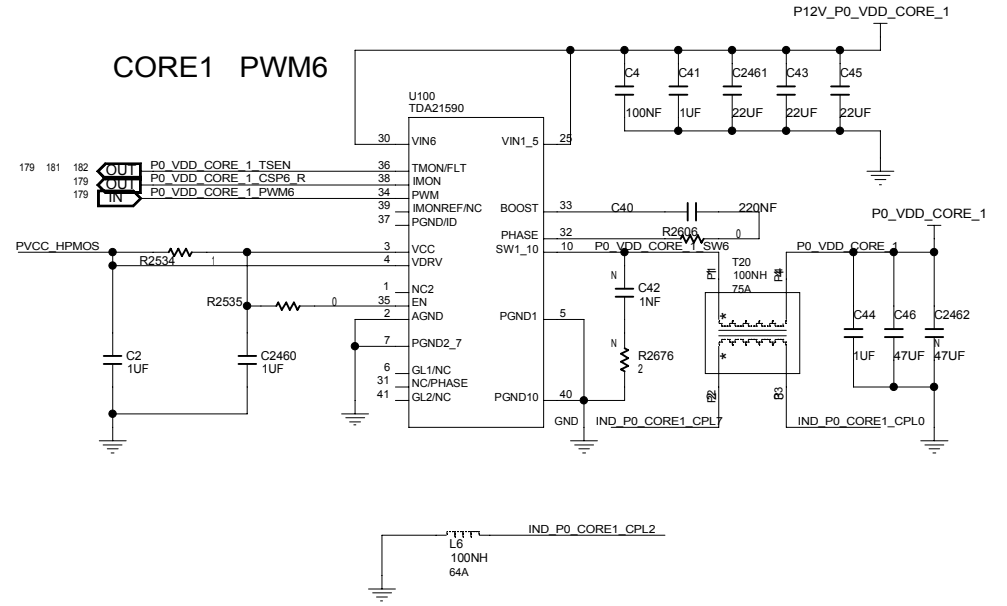

MODULE=---

FUNCTION=---

CNIT TECHNOLOGIES CO.,LTD.				
BOARD NAME MB-CADT24D_VERA			DRAWINGNO CNIT0302K1XKDL	
DESIGNED	yujianjiang00259	DATE <DATE_DN>	SHEET 95 OF 200	REV
REVIEWED	<REVIEWED>	DATE <DATE_RW>	Thu Sep 04 10:55:06 2025	

THIS DOCUMENT AND THE TECHNICAL DATA DISCLOSED ARE PROPRIETARY TO CNIT TECHNOLOGIES CO., LTD. AND SHALL NOT BE DUPLICATED USED RELEASED OR DISCLOSED WITHOUT EXPRESSING WRITTEN PERMISSION.

CPU0 CORE1

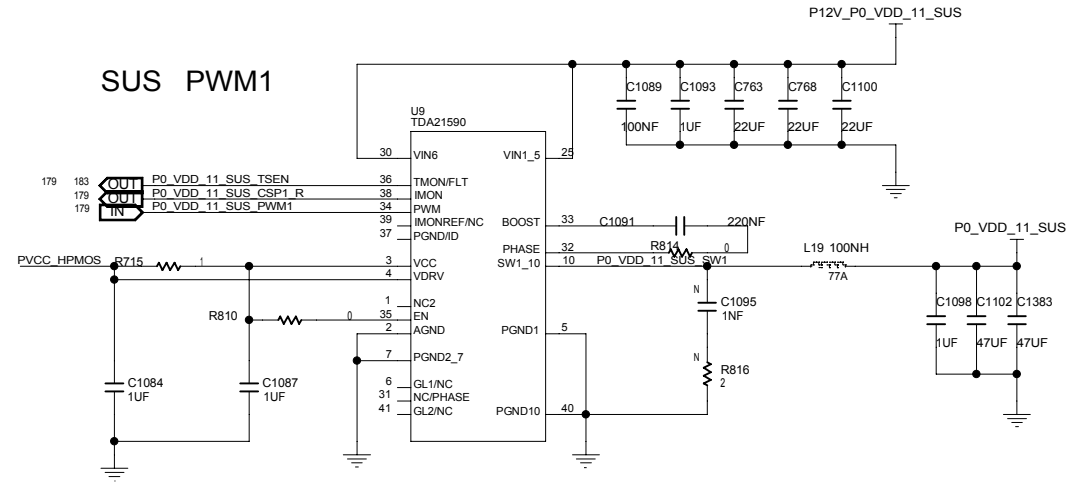

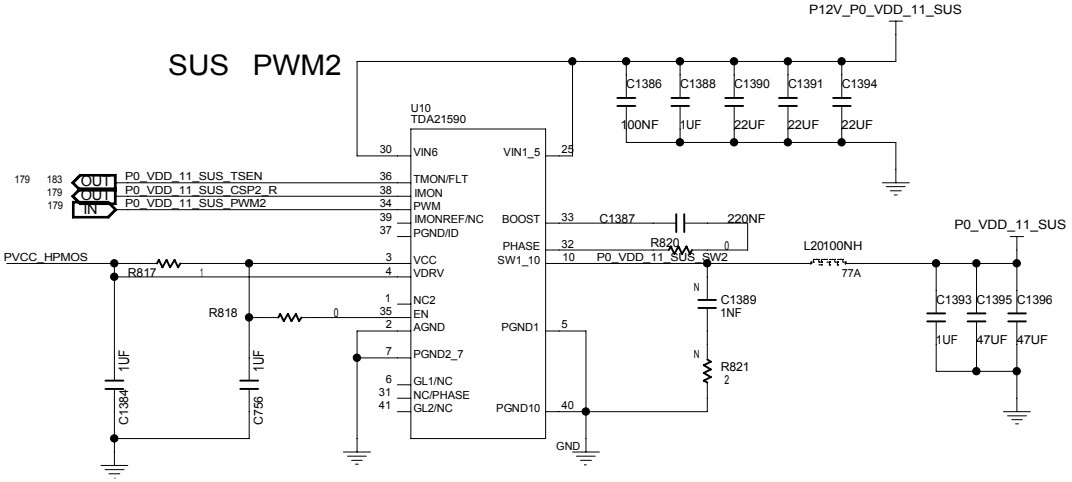

MODULE=---

FUNCTION=---

CNIT TECHNOLOGIES CO.,LTD.				
BOARD NAME MB-CADT24D_VERA			DRAWINGNO CNIT0302K1XKDL	
DESIGNED	yujianjiang00259	DATE <DATE_DN>	SHEET 96 OF 200	REV
REVIEWED	<REVIEWED>	DATE <DATE_RW>	Thu Sep 04 10:55:06 2025	

THIS DOCUMENT AND THE TECHNICAL DATA DISCLOSED ARE PROPRIETARY TO CNIT TECHNOLOGIES CO., LTD. AND SHALL NOT BE DUPLICATED USED RELEASED OR DISCLOSED WITHOUT EXPRESSING WRITTEN PERMISSION.

CPU0 CORE1

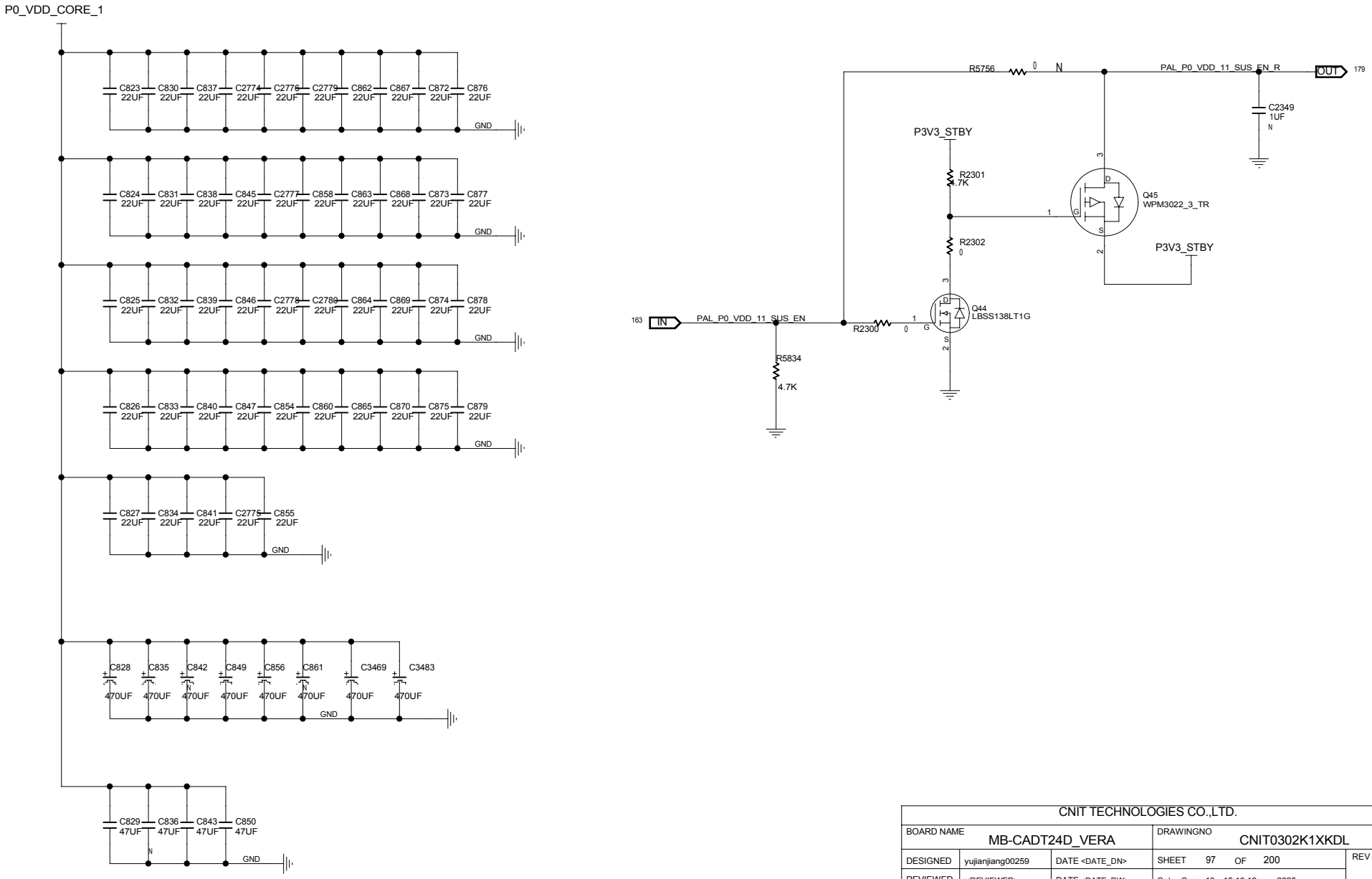

MODULE=---

FUNCTION=---

CNIT TECHNOLOGIES CO.,LTD.				
BOARD NAME MB-CADT24D_VERA			DRAWINGNO CNIT0302K1XKDL	
DESIGNED	yujianjiang00259	DATE <DATE_DN>	SHEET 97 OF 200	REV
REVIEWED	<REVIEWED>	DATE <DATE_RW>	Sat Sep 13 15:10:19 2025	

THIS DOCUMENT AND THE TECHNICAL DATA DISCLOSED ARE PROPRIETARY TO CNIT TECHNOLOGIES CO., LTD. AND SHALL NOT BE DUPLICATED USED RELEASED OR DISCLOSED WITHOUT EXPRESSING WRITTEN PERMISSION.

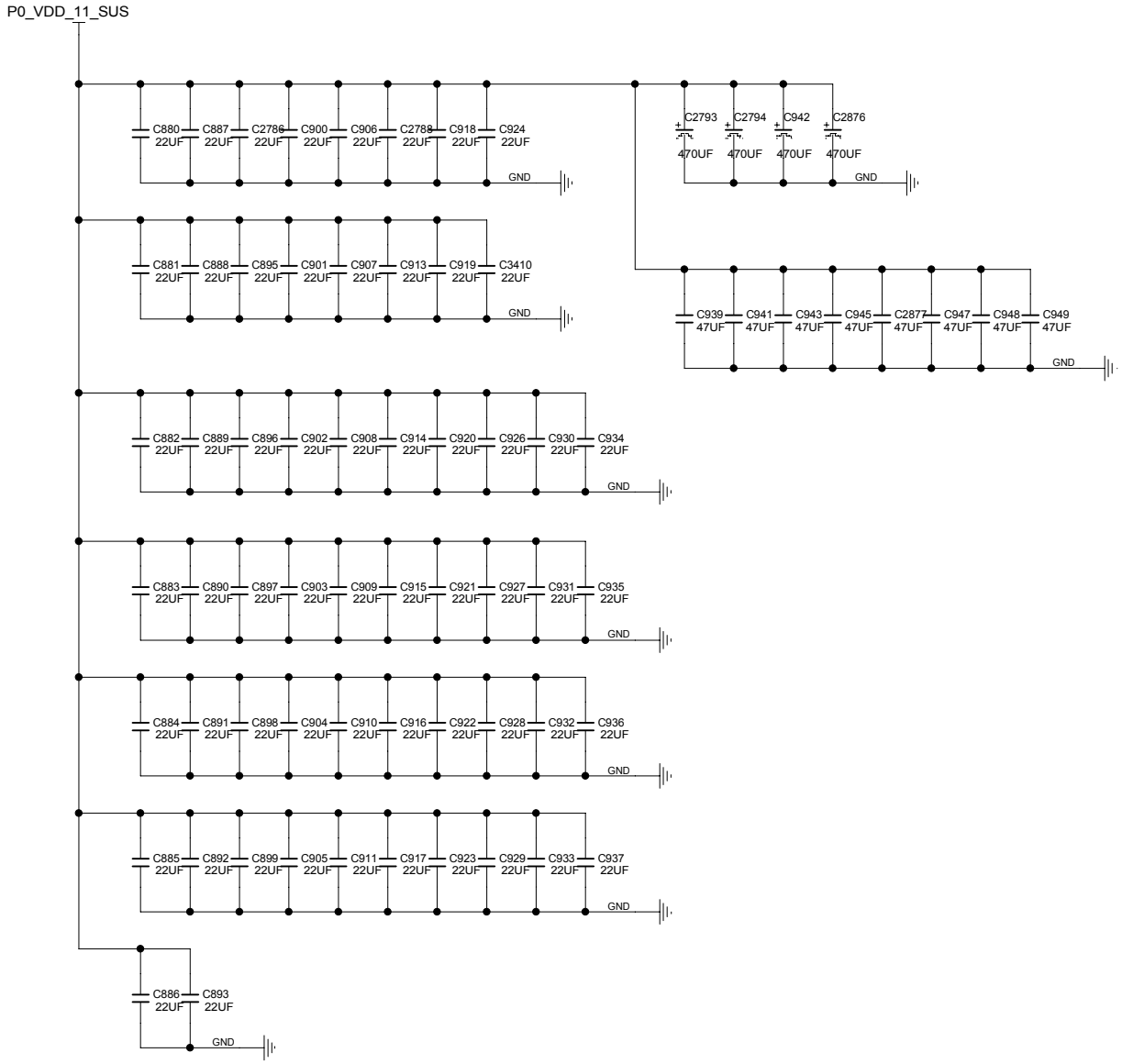

MODULE=---

FUNCTION=---

CNIT TECHNOLOGIES CO.,LTD.				
BOARD NAME MB-CADT24D_VERA			DRAWINGNO CNIT0302K1XKDL	
DESIGNED	yujianjiang00259	DATE <DATE_DN>	SHEET 98 OF 200	REV
REVIEWED	<REVIEWED>	DATE <DATE_RW>	Sat Sep 13 15:10:19 2025	

THIS DOCUMENT AND THE TECHNICAL DATA DISCLOSED ARE PROPRIETARY TO CNIT TECHNOLOGIES CO., LTD. AND SHALL NOT BE DUPLICATED USED RELEASED OR DISCLOSED WITHOUT EXPRESSING WRITTEN PERMISSION.

CPU0 VDDIO

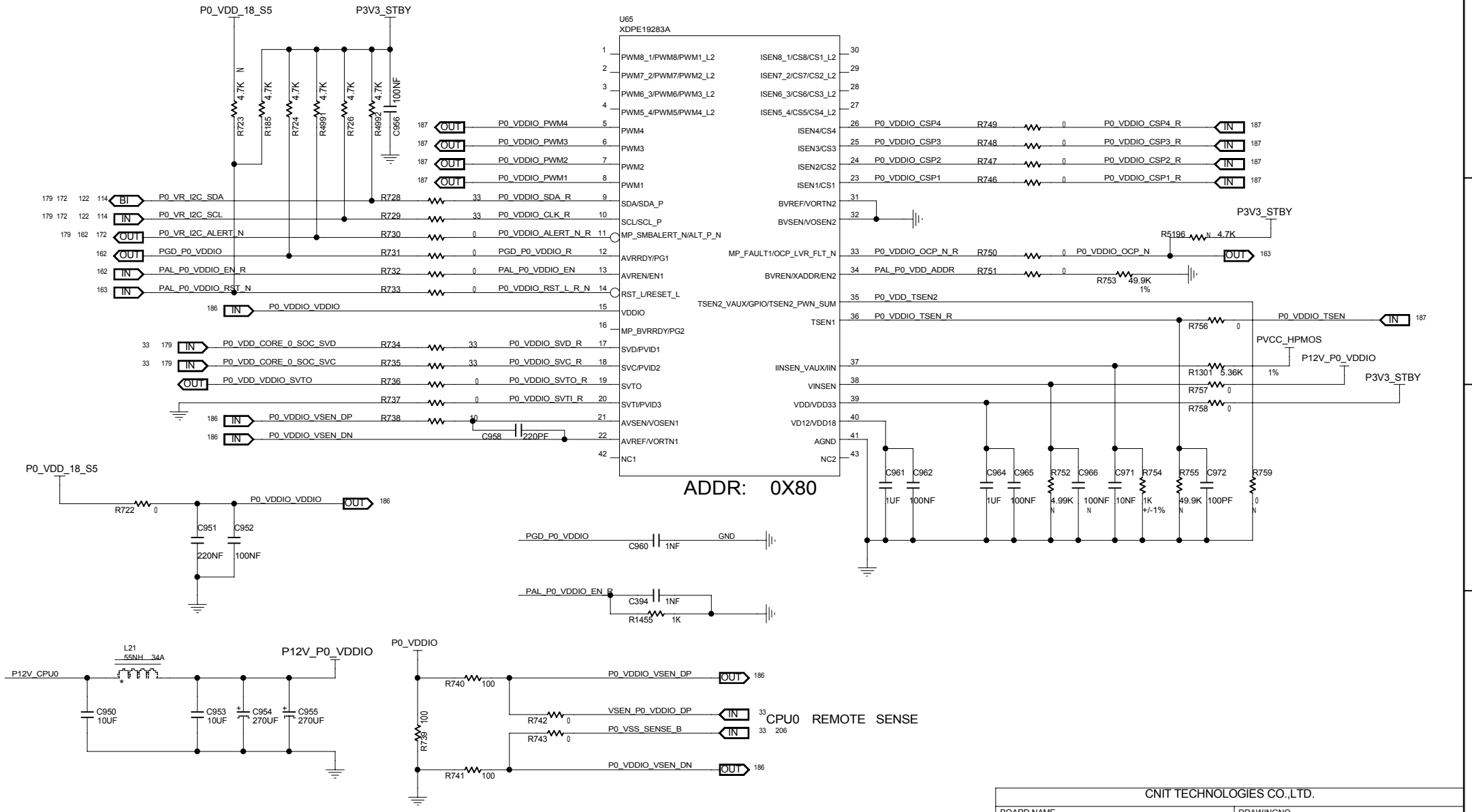

MODULE=---

FUNCTION=---

CNIT TECHNOLOGIES CO.,LTD.				
BOARD NAME MB-CADT24D_VERA			DRAWINGNO CNIT0302K1XKDL	
DESIGNED	yujianjiang00259	DATE <DATE_DN>	SHEET 99 OF 200	REV
REVIEWED	<REVIEWED>	DATE <DATE_RW>	Sat Sep 13 15:10:17 2025	

THIS DOCUMENT AND THE TECHNICAL DATA DISCLOSED ARE PROPRIETARY TO CNIT TECHNOLOGIES CO., LTD. AND SHALL NOT BE DUPLICATED USED RELEASED OR DISCLOSED WITHOUT EXPRESSING WRITTEN PERMISSION.

CPU0 VDDIO

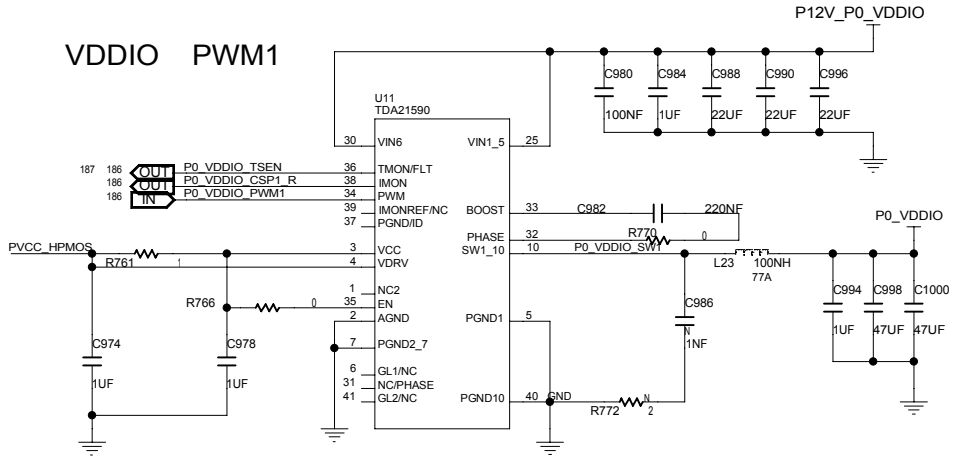

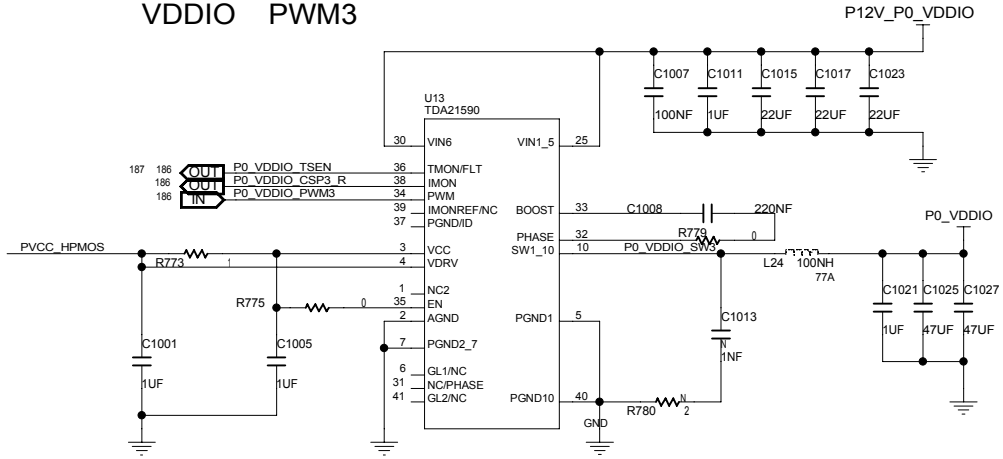

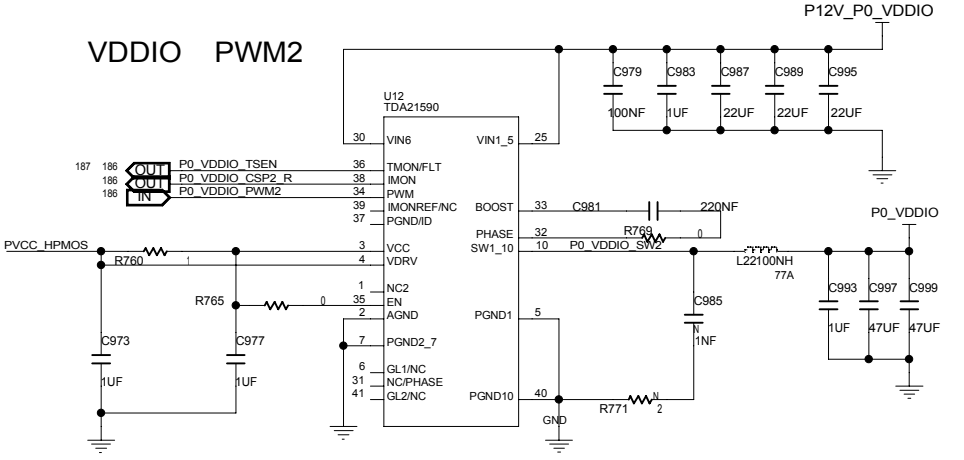

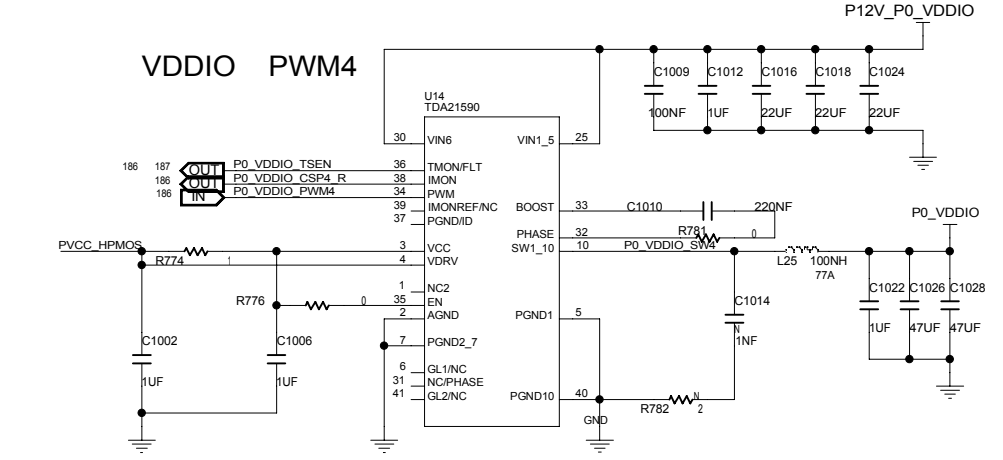

MODULE=---

FUNCTION=---

CNIT TECHNOLOGIES CO.,LTD.				
BOARD NAME MB-CADT24D_VERA			DRAWINGNO CNIT0302K1XKDL	
DESIGNED	yujianjiang00259	DATE <DATE_DN>	SHEET 100 OF 200	REV
REVIEWED	<REVIEWED>	DATE <DATE_RW>	Thu Sep 04 10:21:49 2025	

THIS DOCUMENT AND THE TECHNICAL DATA DISCLOSED ARE PROPRIETARY TO CNIT TECHNOLOGIES CO., LTD. AND SHALL NOT BE DUPLICATED USED RELEASED OR DISCLOSED WITHOUT EXPRESSING WRITTEN PERMISSION.

CPU0 VDDIO

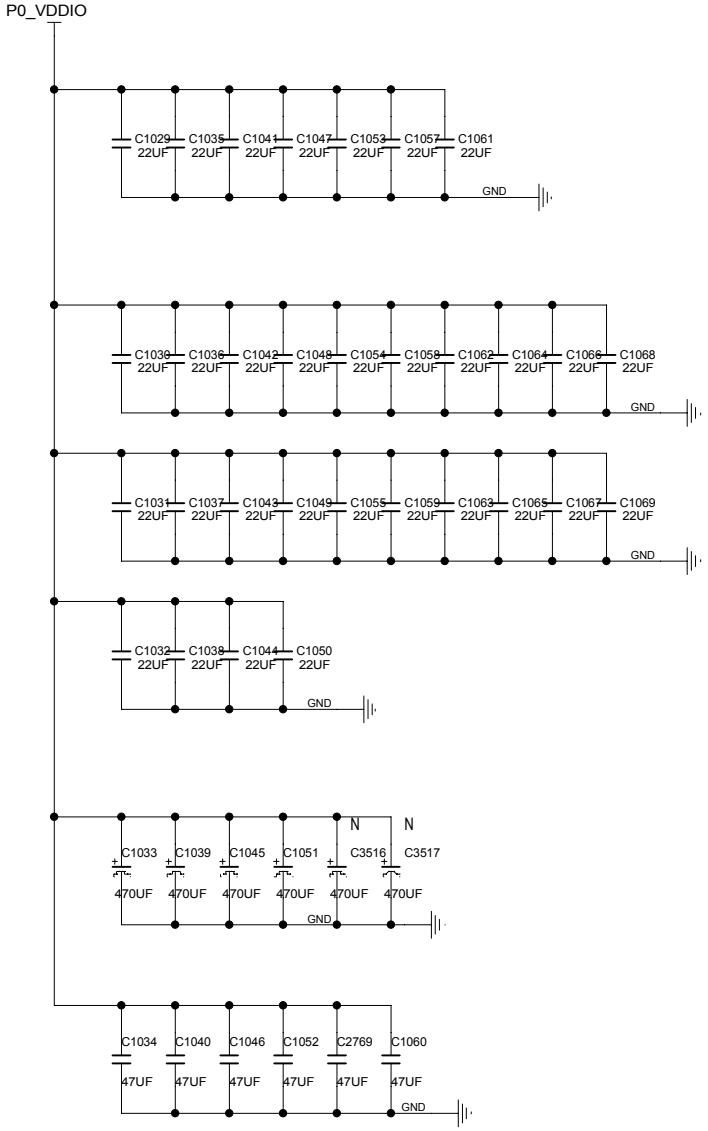

MODULE=---

FUNCTION=---

CNIT TECHNOLOGIES CO.,LTD.				
BOARD NAME MB-CADT24D_VERA			DRAWINGNO CNIT0302K1XKDL	
DESIGNED	yujianjiang00259	DATE <DATE_DN>	SHEET 101 OF 200	REV
REVIEWED	<REVIEWED>	DATE <DATE_RW>	Sat Sep 13 15:10:19 2025	

THIS DOCUMENT AND THE TECHNICAL DATA DISCLOSED ARE PROPRIETARY TO CNIT TECHNOLOGIES CO., LTD. AND SHALL NOT BE DUPLICATED USED RELEASED OR DISCLOSED WITHOUT EXPRESSING WRITTEN PERMISSION.

CPU1 CORE0

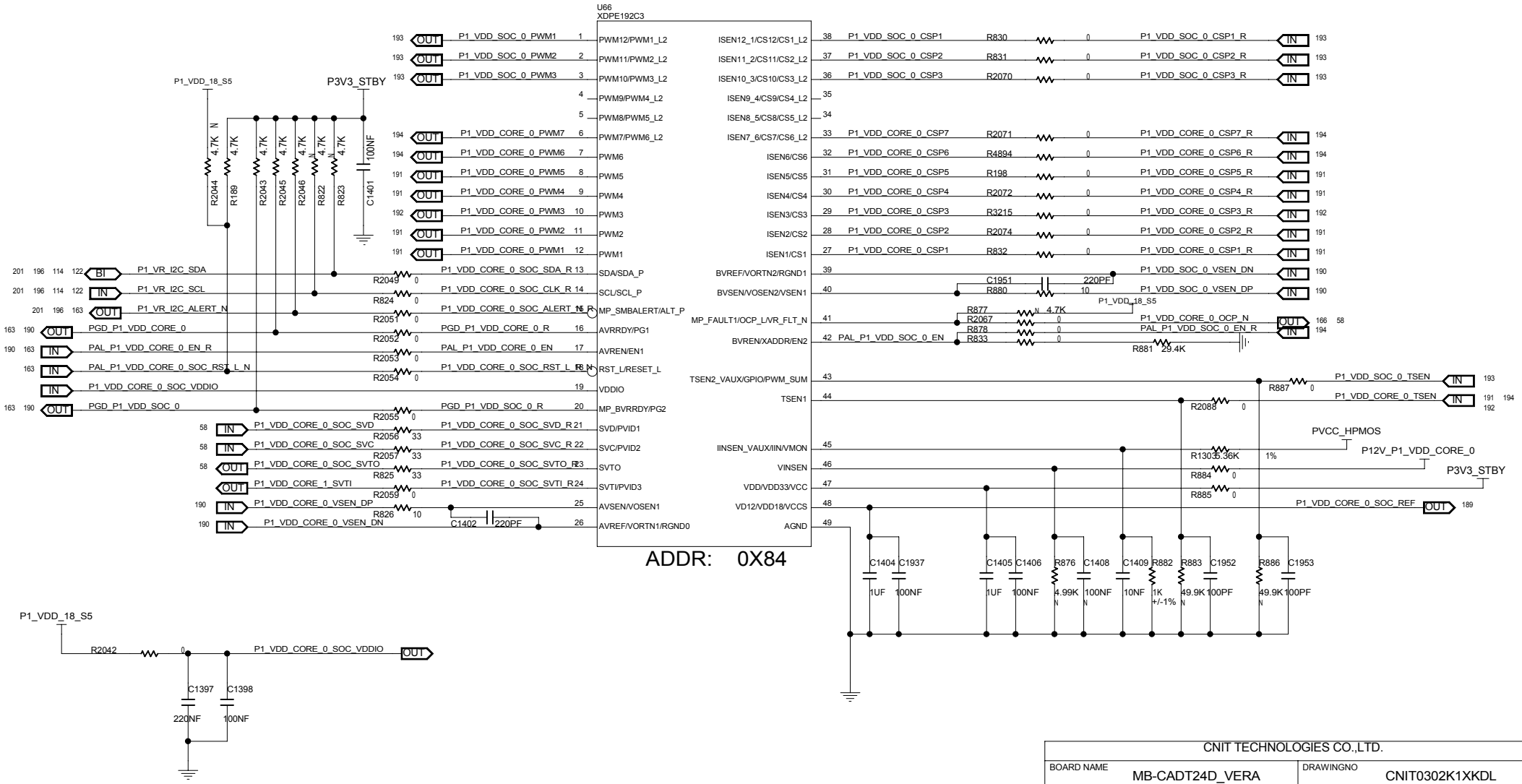

MODULE=---

FUNCTION=---

CNIT TECHNOLOGIES CO.,LTD.				
BOARD NAME MB-CADT24D_VERA			DRAWINGNO CNIT0302K1XKDL	
DESIGNED	yujianjiang00259	DATE <DATE_DN>	SHEET 102 OF 200	REV
REVIEWED	<REVIEWED>	DATE <DATE_RW>	Wed Sep 03 18:49:17 2025	

THIS DOCUMENT AND THE TECHNICAL DATA DISCLOSED ARE PROPRIETARY TO CNIT TECHNOLOGIES CO., LTD. AND SHALL NOT BE DUPLICATED USED RELEASED OR DISCLOSED WITHOUT EXPRESSING WRITTEN PERMISSION.

CPU1 CORE0

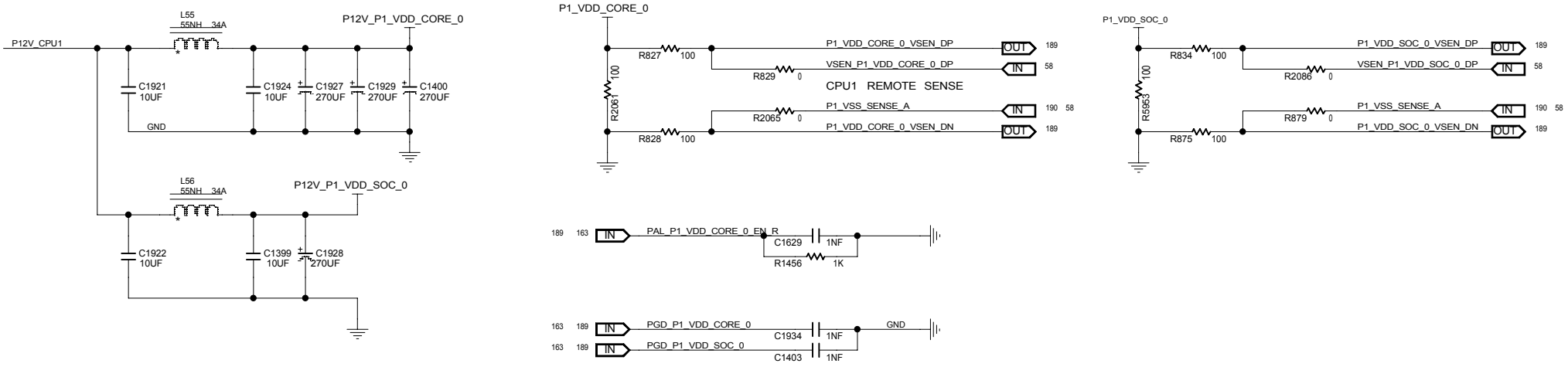

MODULE=---

FUNCTION=---

CNIT TECHNOLOGIES CO.,LTD.				
BOARD NAME MB-CADT24D_VERA			DRAWINGNO CNIT0302K1XKDL	
DESIGNED	yujianjiang00259	DATE <DATE_DN>	SHEET 103 OF 200	REV
REVIEWED	<REVIEWED>	DATE <DATE_RW>	Sat Sep 13 15:10:19 2025	

THIS DOCUMENT AND THE TECHNICAL DATA DISCLOSED ARE PROPRIETARY TO CNIT TECHNOLOGIES CO., LTD. AND SHALL NOT BE DUPLICATED USED RELEASED OR DISCLOSED WITHOUT EXPRESSING WRITTEN PERMISSION.

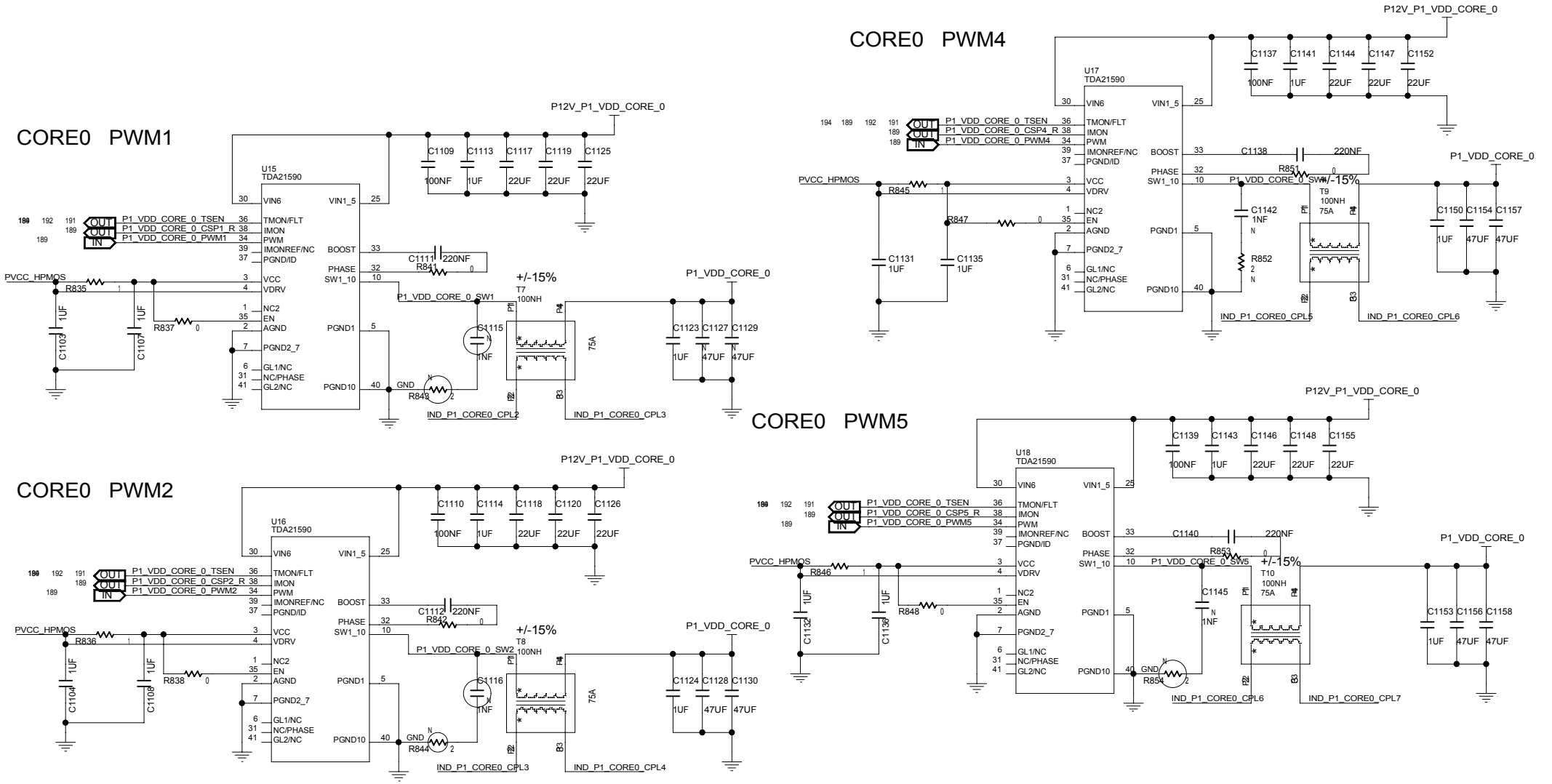

MODULE=---

FUNCTION=---

CNIT TECHNOLOGIES CO.,LTD.				
BOARD NAME MB-CADT24D_VERA			DRAWINGNO CNIT0302K1XKDL	
DESIGNED	yujianjiang00259	DATE <DATE_DN>	SHEET 104 OF 200	REV
REVIEWED	<REVIEWED>	DATE <DATE_RW>	Wed Sep 03 15:59:37 2025	

THIS DOCUMENT AND THE TECHNICAL DATA DISCLOSED ARE PROPRIETARY TO CNIT TECHNOLOGIES CO., LTD. AND SHALL NOT BE DUPLICATED USED RELEASED OR DISCLOSED WITHOUT EXPRESSING WRITTEN PERMISSION.

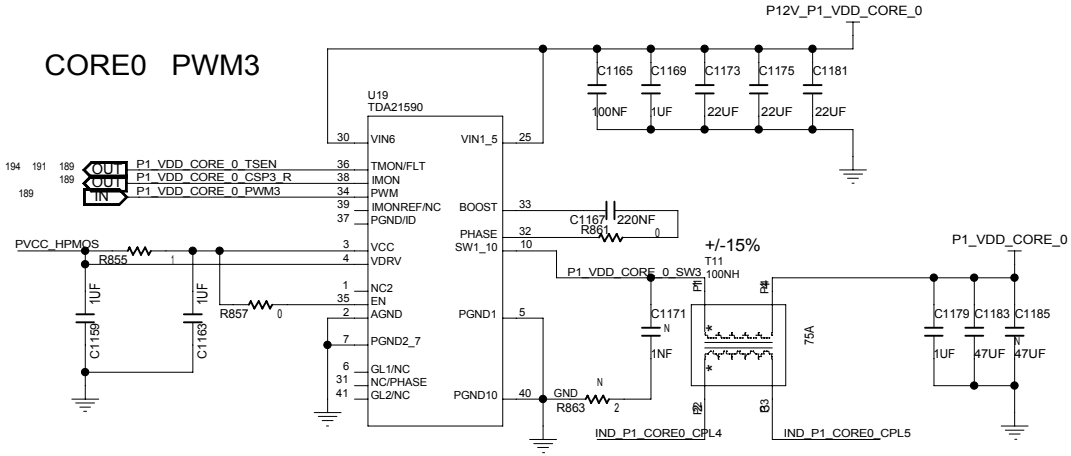

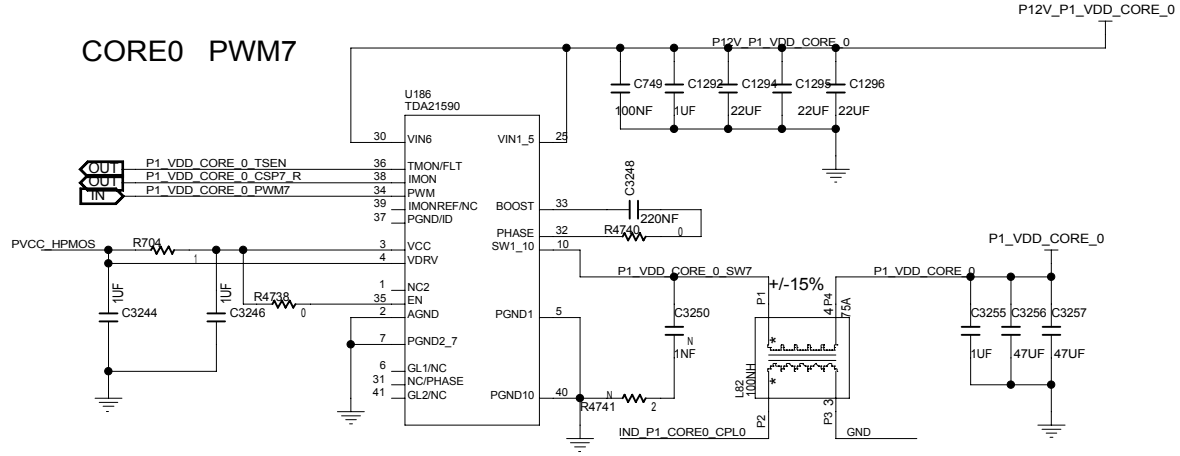

MODULE=---

FUNCTION=---

CNIT TECHNOLOGIES CO.,LTD.				
BOARD NAME MB-CADT24D_VERA			DRAWINGNO CNIT0302K1XKDL	
DESIGNED	yujianjiang00259	DATE <DATE_DN>	SHEET 105 OF 200	REV
REVIEWED	<REVIEWED>	DATE <DATE_RW>	Wed Sep 03 15:59:35 2025	

THIS DOCUMENT AND THE TECHNICAL DATA DISCLOSED ARE PROPRIETARY TO CNIT TECHNOLOGIES CO., LTD. AND SHALL NOT BE DUPLICATED USED RELEASED OR DISCLOSED WITHOUT EXPRESSING WRITTEN PERMISSION.

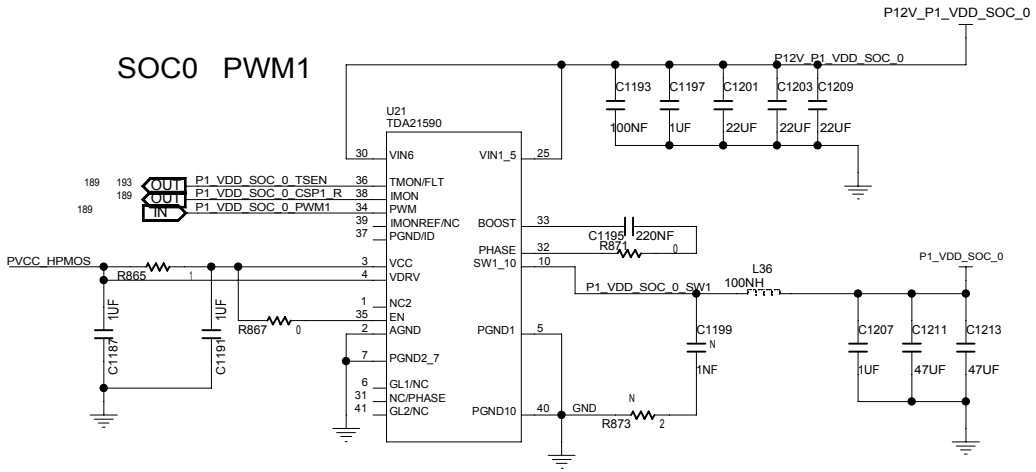

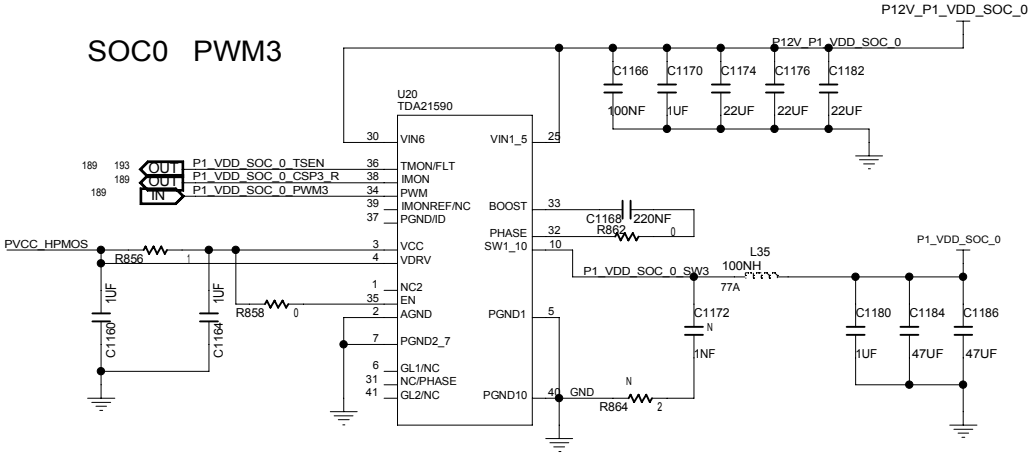

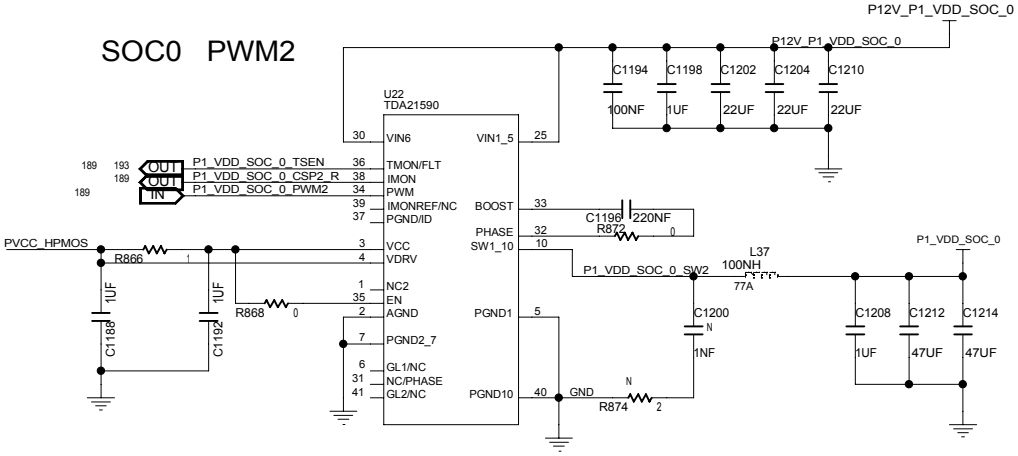

MODULE=---

FUNCTION=---

CNIT TECHNOLOGIES CO.,LTD.				
BOARD NAME MB-CADT24D_VERA			DRAWINGNO CNIT0302K1XKDL	
DESIGNED	yujianjiang00259	DATE <DATE_DN>	SHEET 106 OF 200	REV
REVIEWED	<REVIEWED>	DATE <DATE_RW>	Wed Sep 03 15:59:35 2025	

THIS DOCUMENT AND THE TECHNICAL DATA DISCLOSED ARE PROPRIETARY TO CNIT TECHNOLOGIES CO., LTD. AND SHALL NOT BE DUPLICATED USED RELEASED OR DISCLOSED WITHOUT EXPRESSING WRITTEN PERMISSION.

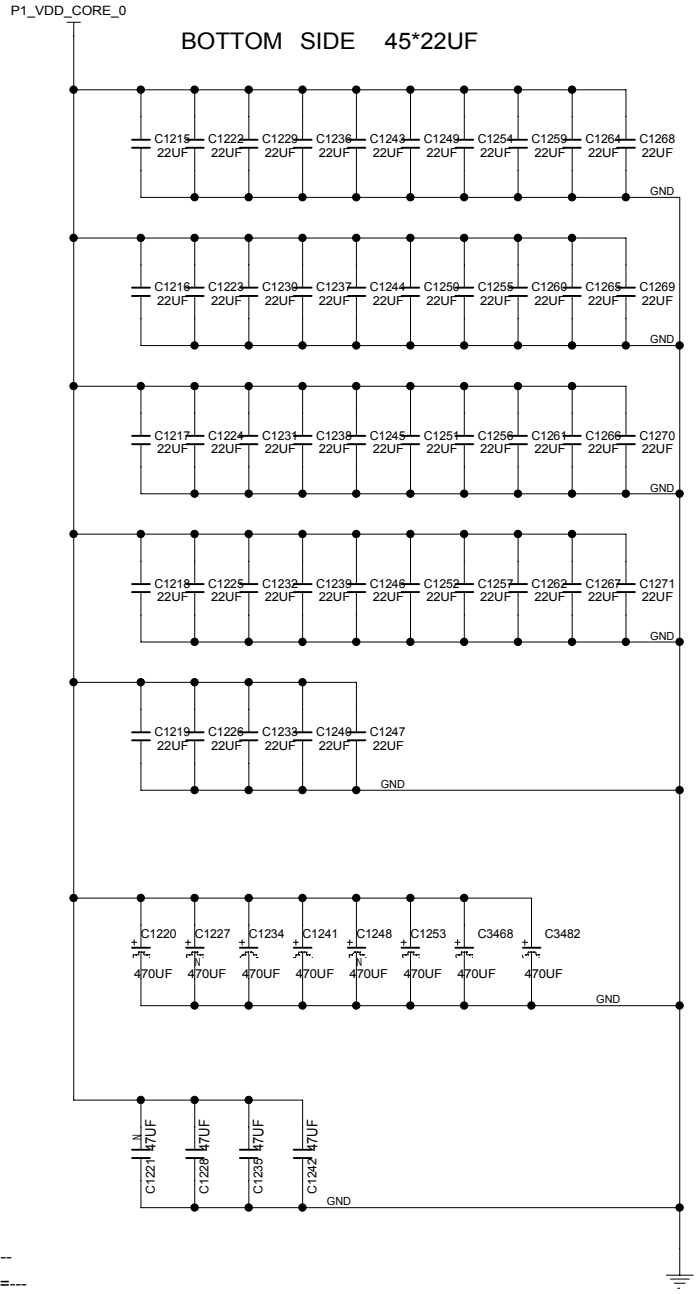

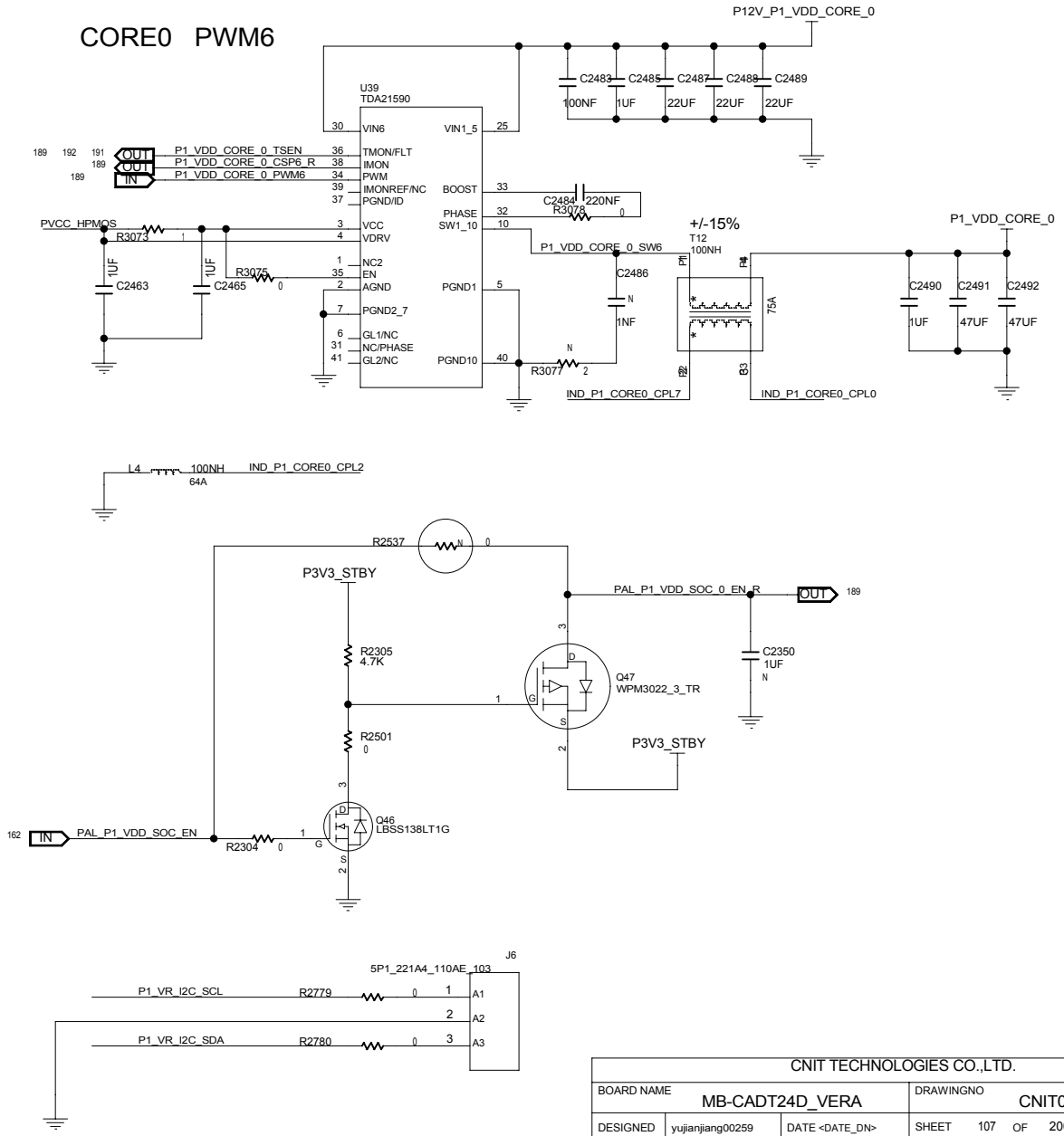

MODULE=---

FUNCTION=---

CNIT TECHNOLOGIES CO.,LTD.				
BOARD NAME MB-CADT24D_VERA			DRAWINGNO CNIT0302K1XKDL	
DESIGNED	yujianjiang00259	DATE <DATE_DN>	SHEET 107 OF 200	REV
REVIEWED	<REVIEWED>	DATE <DATE_RW>	Sat Sep 13 15:10:20 2025	

THIS DOCUMENT AND THE TECHNICAL DATA DISCLOSED ARE PROPRIETARY TO CNIT TECHNOLOGIES CO., LTD. AND SHALL NOT BE DUPLICATED USED RELEASED OR DISCLOSED WITHOUT EXPRESSING WRITTEN PERMISSION.

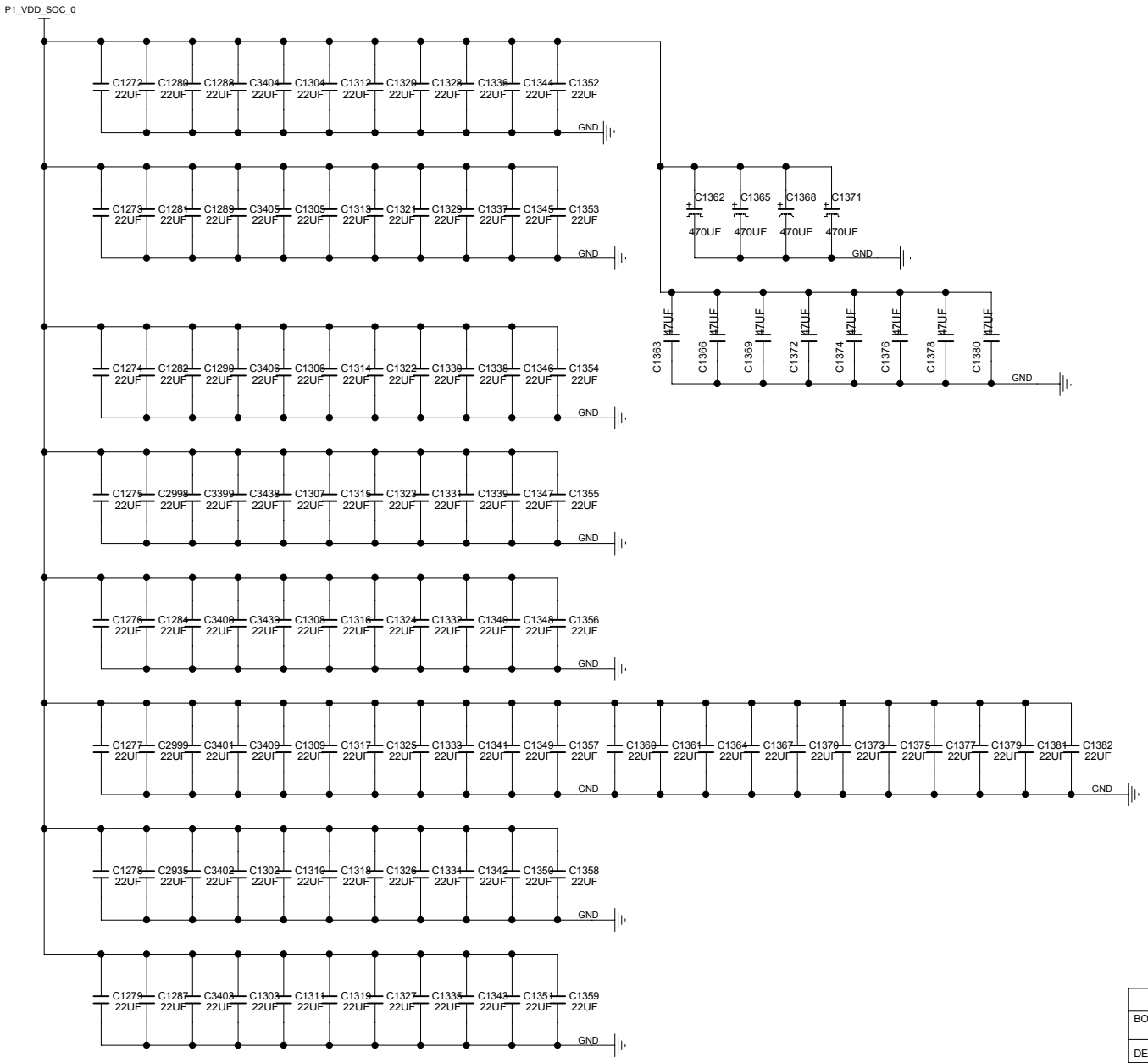

MODULE=---

FUNCTION=---

CNIT TECHNOLOGIES CO.,LTD.				
BOARD NAME MB-CADT24D_VERA			DRAWINGNO CNIT0302K1XKDL	
DESIGNED	yujianjiang00259	DATE <DATE_DN>	SHEET 108 OF 200	REV
REVIEWED	<REVIEWED>	DATE <DATE_RW>	Sat Sep 13 15:10:20 2025	

THIS DOCUMENT AND THE TECHNICAL DATA DISCLOSED ARE PROPRIETARY TO CNIT TECHNOLOGIES CO., LTD. AND SHALL NOT BE DUPLICATED USED RELEASED OR DISCLOSED WITHOUT EXPRESSING WRITTEN PERMISSION.

CPU1 CORE1

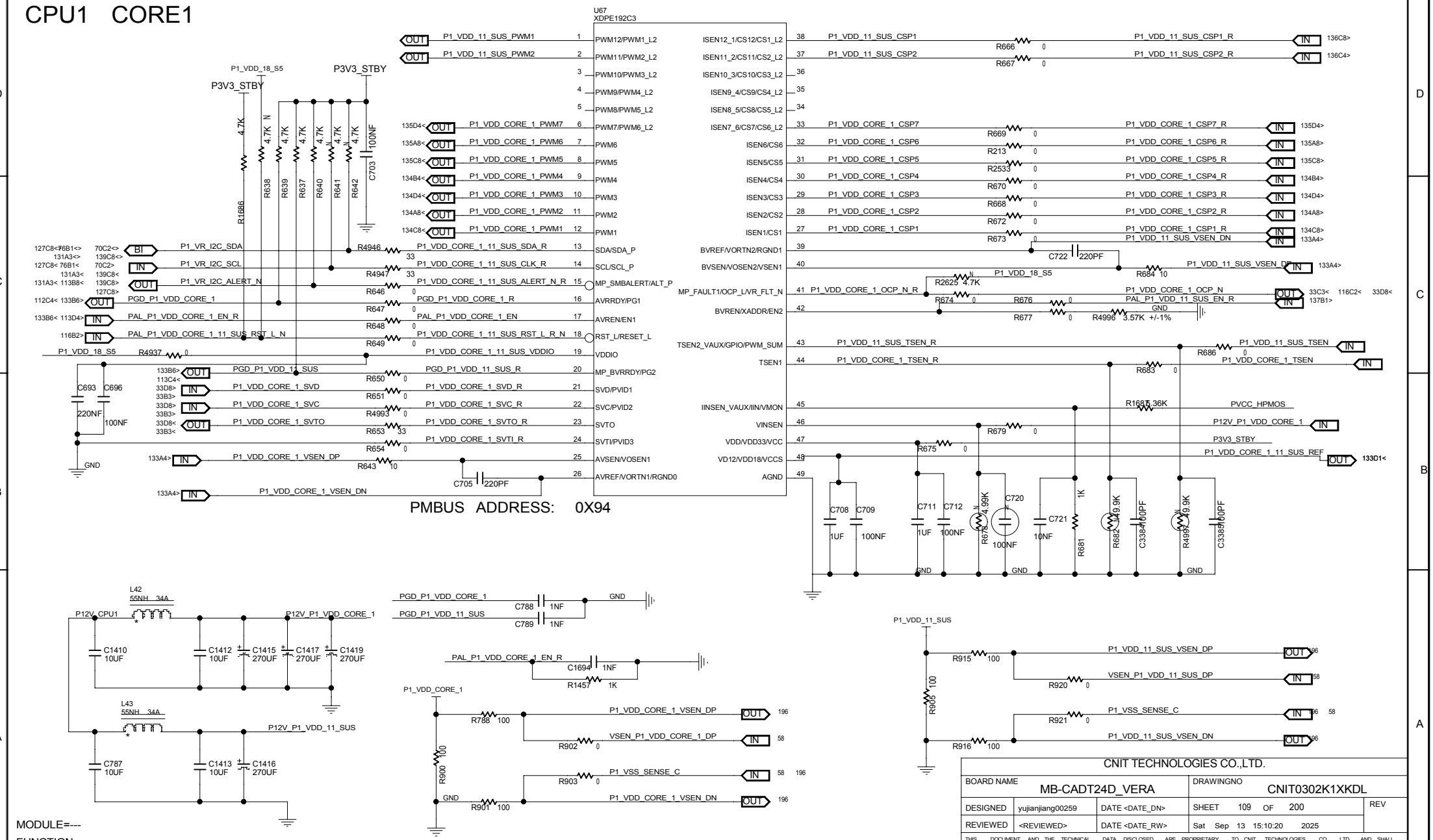

CNIT TECHNOLOGIES CO.,LTD.			
BOARD NAME MB-CADT24D_VERA		DRAWINGNO CNIT0302K1XKDL	
DESIGNED yujianjiang00259	DATE <DATE_DN>	SHEET 109 OF 200	REV
REVIEWED <REVIEWED>	DATE <DATE_RW>	Sat Sep 13 15:10:20 2025	

THIS DOCUMENT AND THE TECHNICAL DATA DISCLOSED ARE PROPRIETARY TO CNIT TECHNOLOGIES CO., LTD. AND SHALL NOT BE DUPLICATED USED RELEASED OR DISCLOSED WITHOUT EXPRESSING WRITTEN PERMISSION.

CPU1 CORE1

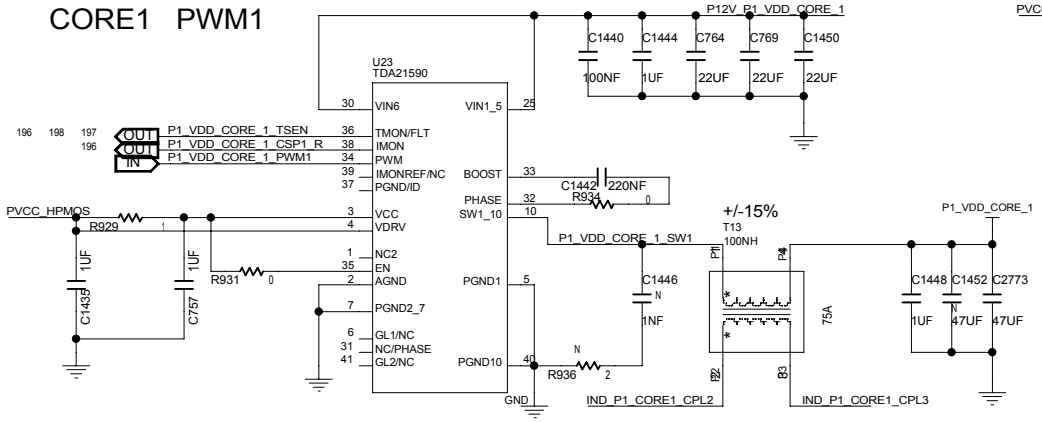

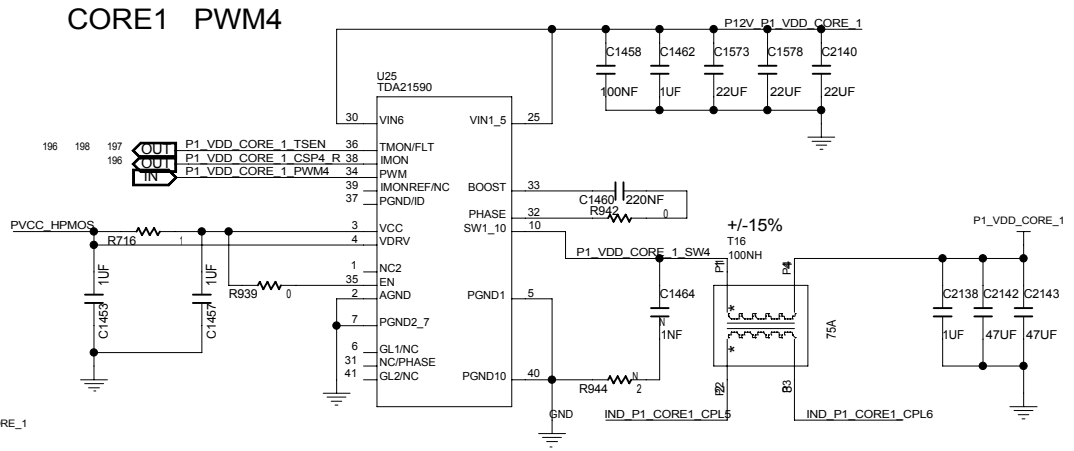

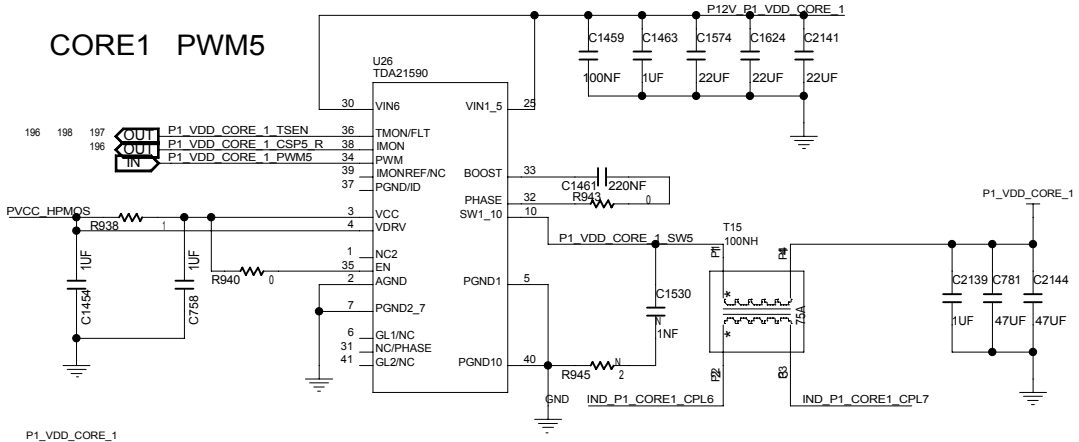

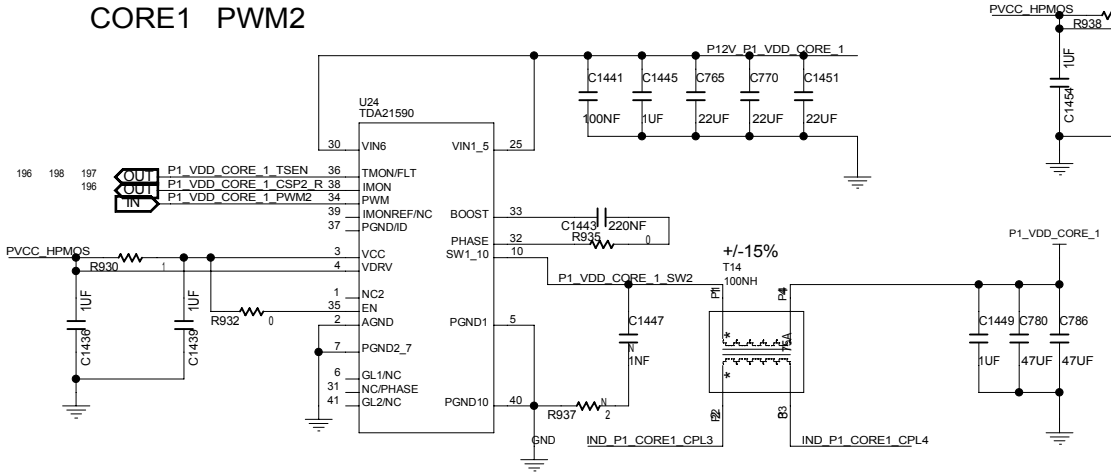

MODULE=---

FUNCTION=---

CNIT TECHNOLOGIES CO.,LTD.				
BOARD NAME	MB-CADT24D_VERA		DRAWINGNO	CNIT0302K1XKDL
DESIGNED	yujianjiang00259	DATE <DATE_DN>	SHEET 110 OF 200	REV
REVIEWED	<REVIEWED>	DATE <DATE_RW>	Wed Sep 03 11:38:12 2025	

THIS DOCUMENT AND THE TECHNICAL DATA DISCLOSED ARE PROPRIETARY TO CNIT TECHNOLOGIES CO., LTD. AND SHALL NOT BE DUPLICATED USED RELEASED OR DISCLOSED WITHOUT EXPRESSING WRITTEN PERMISSION.

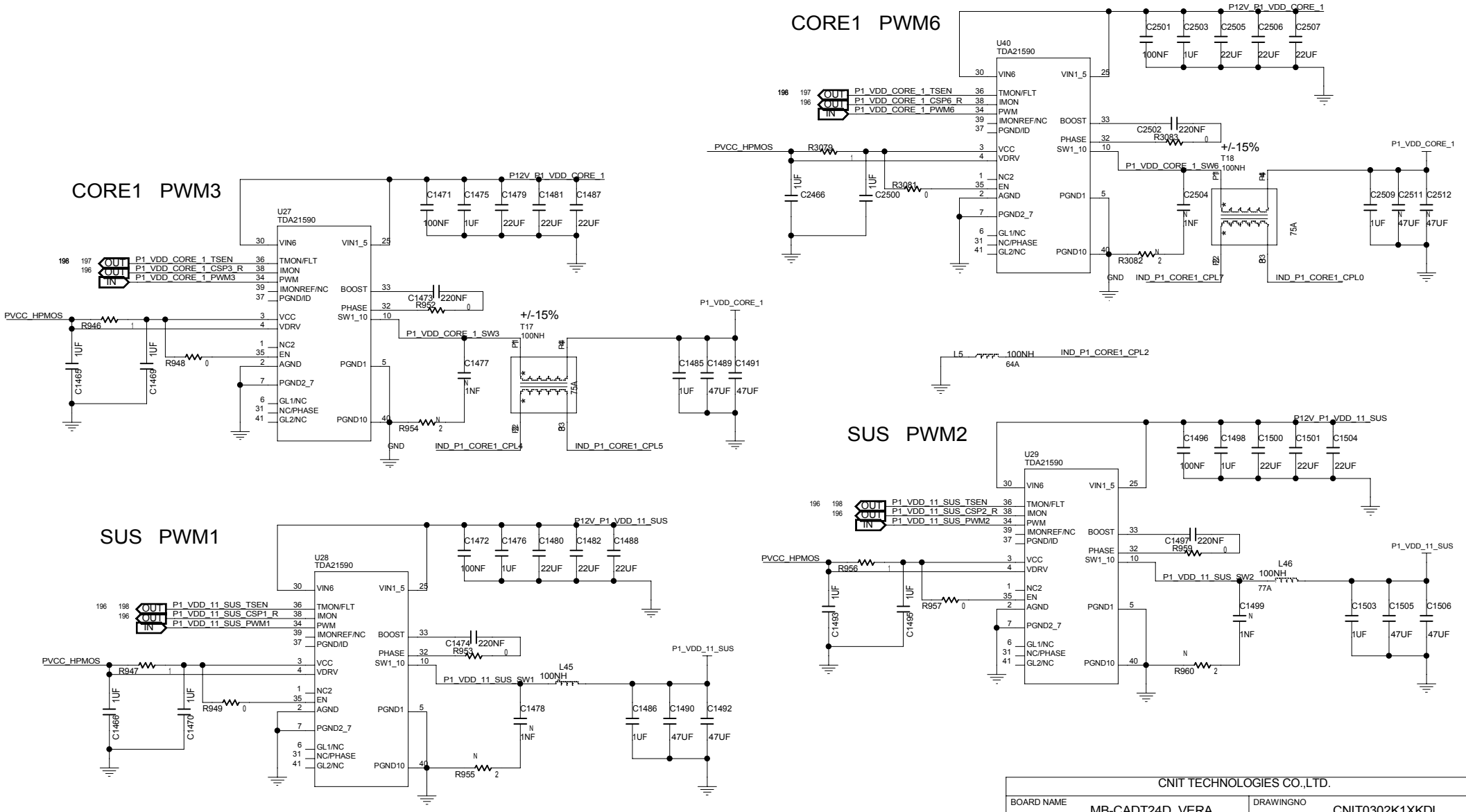
CORE1 PWM6
U40
TDA21590
P12V_P1_VDD_CORE_1
C2501 C2503 C2505 C2506 C2507
100NF 1UF 22UF 22UF 22UF
P1_VDD_CORE_1_TSEN
P1_VDD_CORE_1_CSP6_R
P1_VDD_CORE_1_PWM6
VIN6 VIN1_5 TMON/FLT IMON PWM IMONREF/NC PGND/ID BOOST PHASE SW1_10 VCC VDRV NC2 EN AGND PGND2_7 GL1/NC NC/PHASE GL2/NC PGND1 PGND10
C2502 220NF
R3083 0
PVCC_HPMOS
R3079
C2466 1UF
C2500 1UF
R3081 0
+/-15%
T18
100NH
P1_VDD_CORE_1_SW6
C2504 1NF
R3082 2
75A
C2509 C2511 C2512
1UF 47UF 47UF
GND
IND_P1_CORE1_CPL7
IND_P1_CORE1_CPL0
L5 100NH
64A
IND_P1_CORE1_CPL2
CORE1 PWM3
U27
TDA21590
P12V_P1_VDD_CORE_1
C1471 C1475 C1479 C1481 C1487
100NF 1UF 22UF 22UF 22UF
P1_VDD_CORE_1_TSEN
P1_VDD_CORE_1_CSP3_R
P1_VDD_CORE_1_PWM3
C1473 220NF
R952 0
PVCC_HPMOS
R946 1
C1468 1UF
C1469 1UF
R948 0
P1_VDD_CORE_1_SW3
C1477 1NF
+/-15%
T17
100NH
75A
R954 2
GND
IND_P1_CORE1_CPL4
IND_P1_CORE1_CPL5
C1485 C1489 C1491
1UF 47UF 47UF
SUS PWM2
U29
TDA21590
P12V_P1_VDD_11_SUS
C1496 C1498 C1500 C1501 C1504
100NF 1UF 22UF 22UF 22UF
P1_VDD_11_SUS_TSEN
P1_VDD_11_SUS_CSP2_R
P1_VDD_11_SUS_PWM2
C1497 220NF
R959 0
PVCC_HPMOS
R956 1
C1493 1UF
C1495 1UF
R957 0
P1_VDD_11_SUS_SW2
L46
100NH
77A
C1499 1NF
R960 2
C1503 C1505 C1506
1UF 47UF 47UF
SUS PWM1
U28
TDA21590
P12V_P1_VDD_11_SUS
C1472 C1476 C1480 C1482 C1488
100NF 1UF 22UF 22UF 22UF
P1_VDD_11_SUS_TSEN
P1_VDD_11_SUS_CSP1_R
P1_VDD_11_SUS_PWM1
C1474 220NF
R953 0
PVCC_HPMOS
R947 1
C1466 1UF
C1470 1UF
R949 0
P1_VDD_11_SUS_SW1
L45
100NH
C1478 1NF
R955 2
C1486 C1490 C1492
1UF 47UF 47UF
MODULE=---
FUNCTION=---
CNIT TECHNOLOGIES CO.,LTD.
BOARD NAME
MB-CADT24D_VERA
DRAWINGNO
CNIT0302K1XKDL
DESIGNED
yujianjiang00259
DATE <DATE_DN>
SHEET 111 OF 200
REV
REVIEWED
<REVIEWED>
DATE <DATE_RW>
Wed Sep 03 11:38:10 2025
THIS DOCUMENT AND THE TECHNICAL DATA DISCLOSED ARE PROPRIETARY TO CNIT TECHNOLOGIES CO., LTD. AND SHALL NOT BE DUPLICATED USED RELEASED OR DISCLOSED WITHOUT EXPRESSING WRITTEN PERMISSION.

CPU1 CORE1

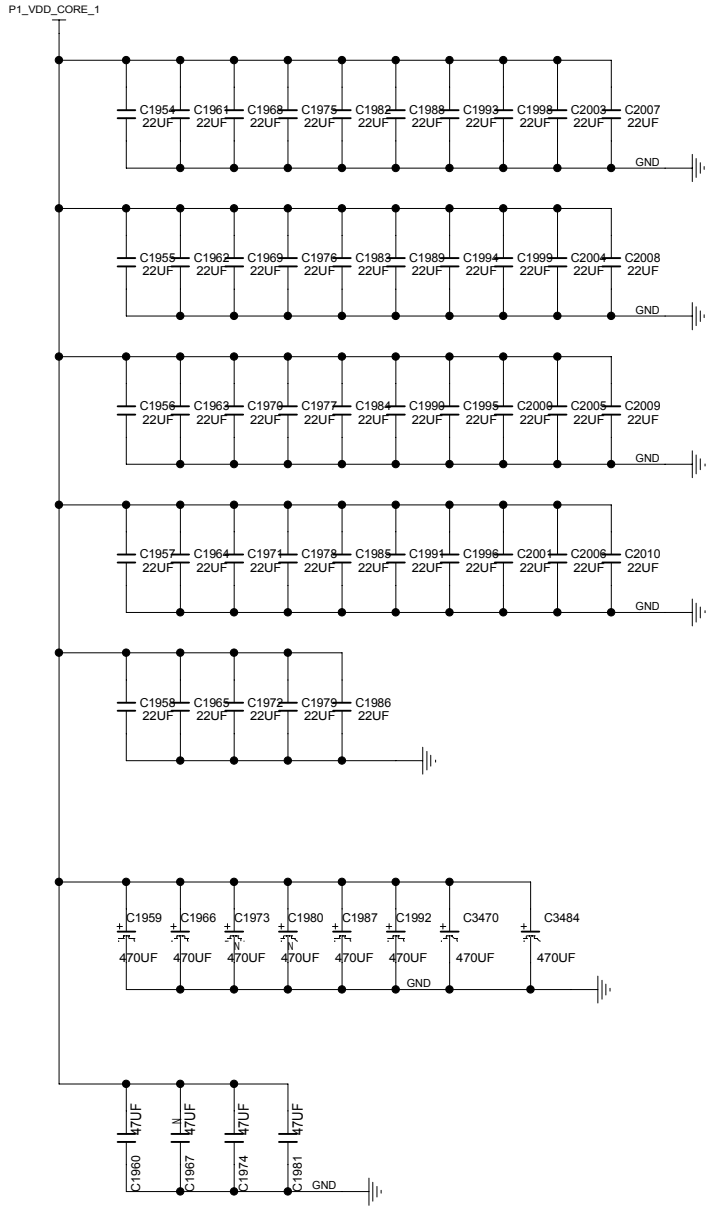

CORE1 PWM7

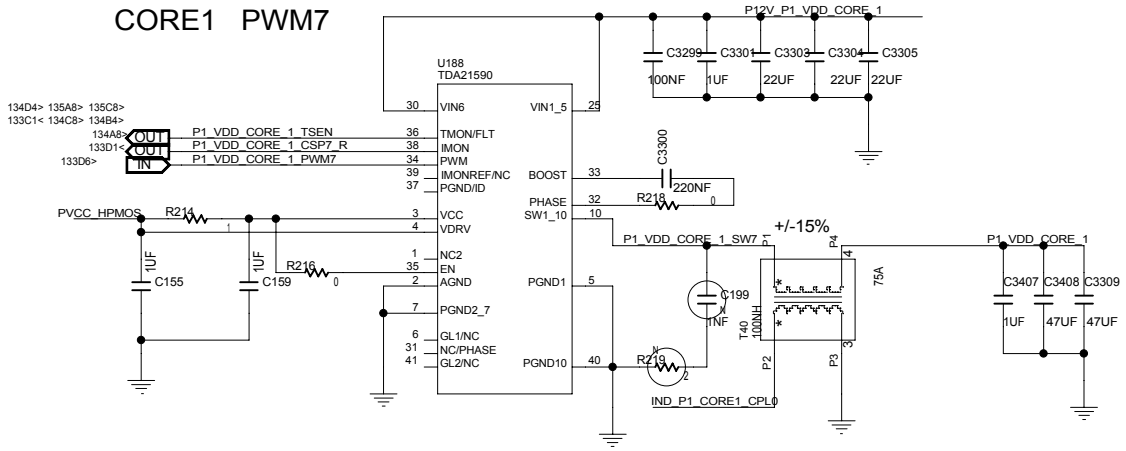

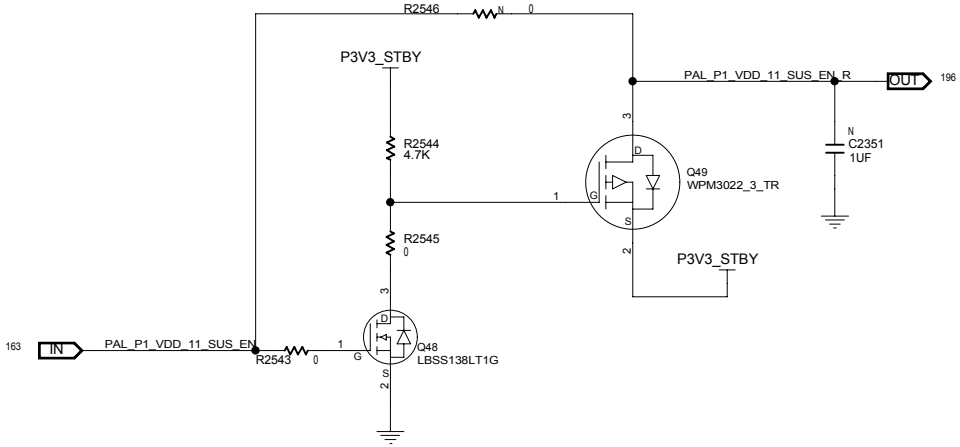

MODULE=---

FUNCTION=---

CNIT TECHNOLOGIES CO.,LTD.				
BOARD NAME MB-CADT24D_VERA			DRAWINGNO CNIT0302K1XKDL	
DESIGNED	yujianjiang00259	DATE <DATE_DN>	SHEET 112 OF 200	REV
REVIEWED	<REVIEWED>	DATE <DATE_RW>	Sat Sep 13 15:10:22 2025	

THIS DOCUMENT AND THE TECHNICAL DATA DISCLOSED ARE PROPRIETARY TO CNIT TECHNOLOGIES CO., LTD. AND SHALL NOT BE DUPLICATED USED RELEASED OR DISCLOSED WITHOUT EXPRESSING WRITTEN PERMISSION.

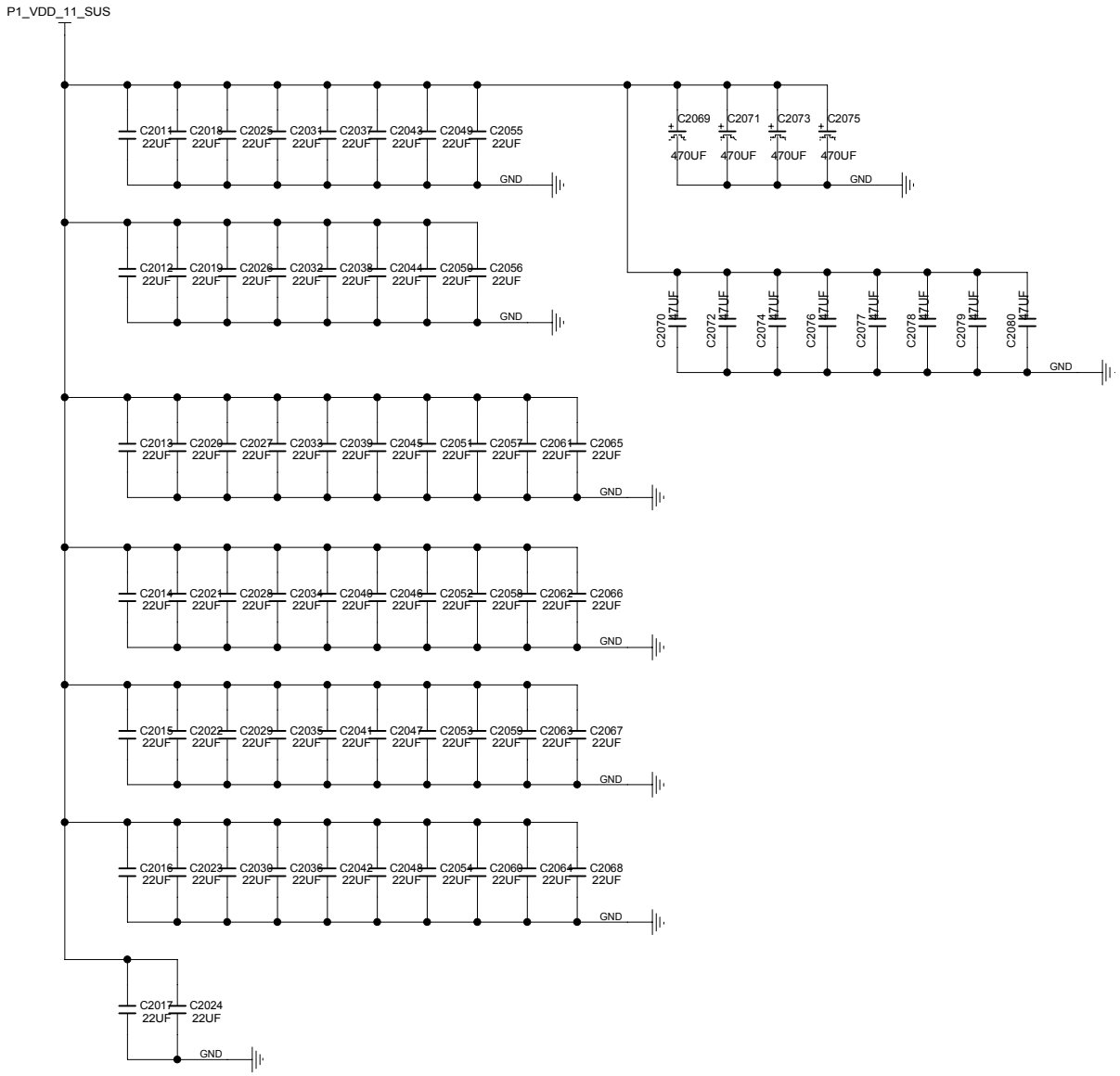

MODULE=---

FUNCTION=---

CNIT TECHNOLOGIES CO.,LTD.				
BOARD NAME MB-CADT24D_VERA			DRAWINGNO CNIT0302K1XKDL	
DESIGNED	yujianjiang00259	DATE <DATE_DN>	SHEET 113 OF 200	REV
REVIEWED	<REVIEWED>	DATE <DATE_RW>	Sat Sep 13 15:10:22 2025	

THIS DOCUMENT AND THE TECHNICAL DATA DISCLOSED ARE PROPRIETARY TO CNIT TECHNOLOGIES CO., LTD. AND SHALL NOT BE DUPLICATED USED RELEASED OR DISCLOSED WITHOUT EXPRESSING WRITTEN PERMISSION.

CPU1 VDDIO

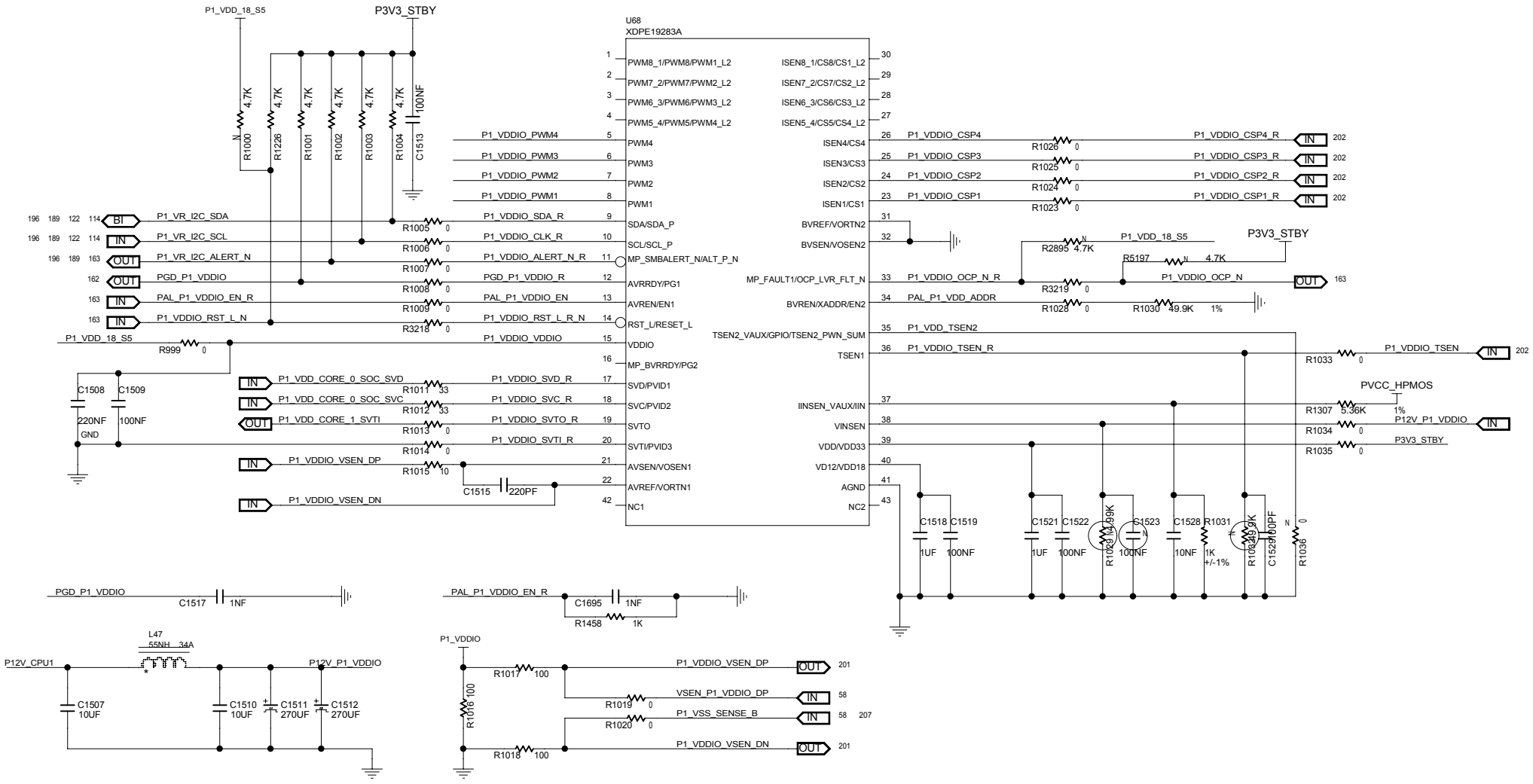

MODULE=---

FUNCTION=---

CNIT TECHNOLOGIES CO.,LTD.				
BOARD NAME MB-CADT24D_VERA			DRAWINGNO CNIT0302K1XKDL	
DESIGNED	yujianjiang00259	DATE <DATE_DN>	SHEET 114 OF 200	REV
REVIEWED	<REVIEWED>	DATE <DATE_RW>	Sat Sep 13 15:10:23 2025	

THIS DOCUMENT AND THE TECHNICAL DATA DISCLOSED ARE PROPRIETARY TO CNIT TECHNOLOGIES CO., LTD. AND SHALL NOT BE DUPLICATED USED RELEASED OR DISCLOSED WITHOUT EXPRESSING WRITTEN PERMISSION.

CPU1 VDDIO

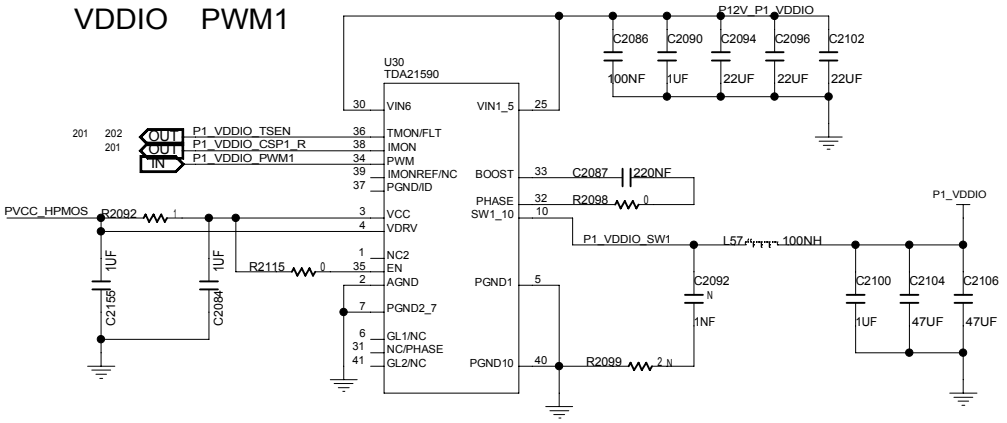

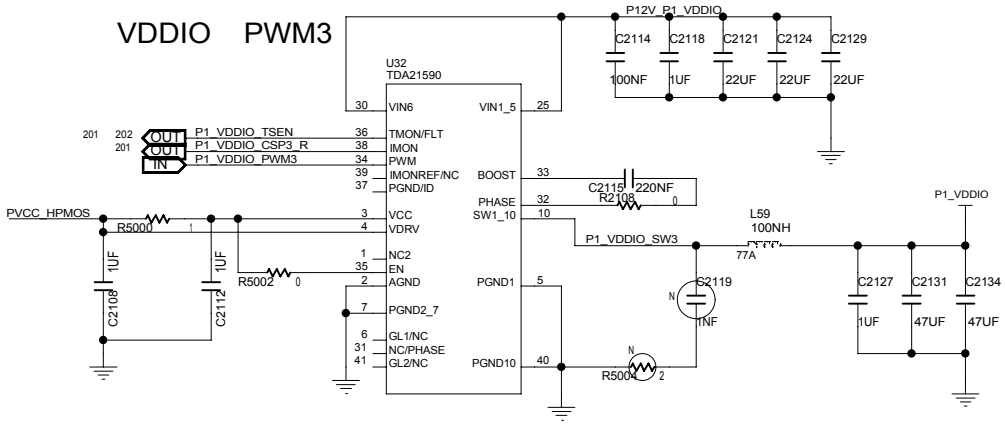

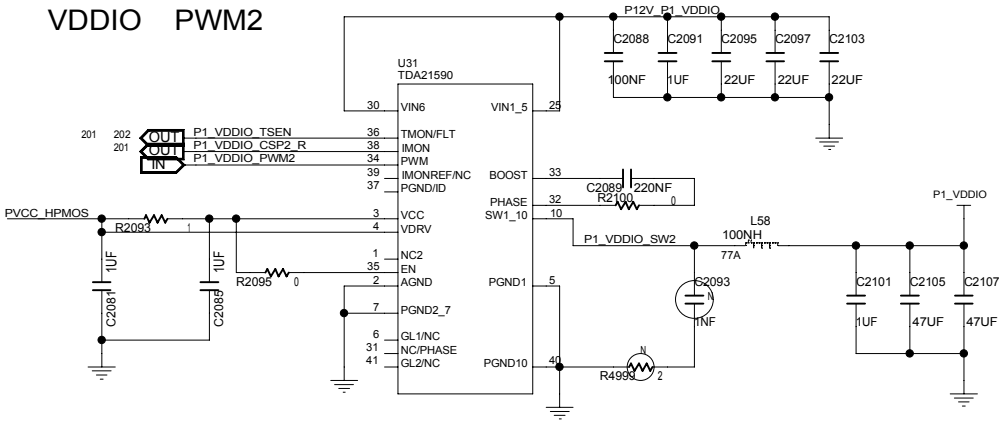

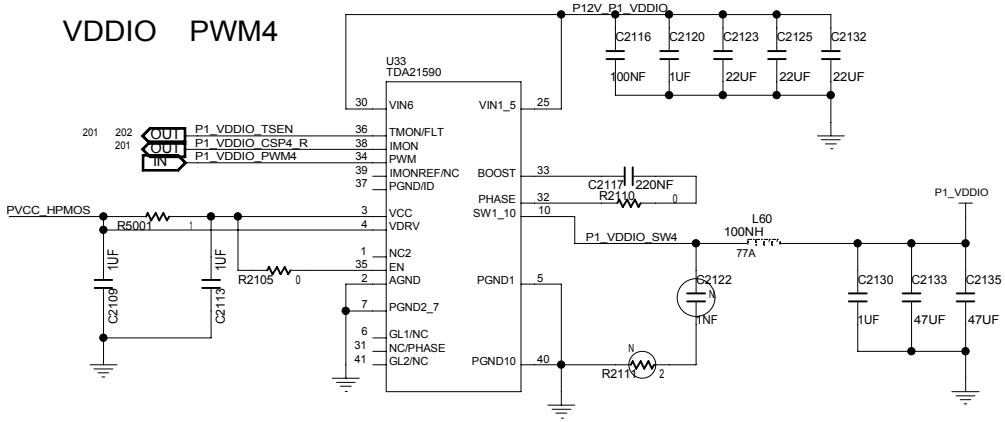

MODULE=---

FUNCTION=---

CNIT TECHNOLOGIES CO.,LTD.				
BOARD NAME MB-CADT24D_VERA			DRAWINGNO CNIT0302K1XKDL	
DESIGNED	yujianjiang00259	DATE <DATE_DN>	SHEET 115 OF 200	REV
REVIEWED	<REVIEWED>	DATE <DATE_RW>	Wed Sep 03 10:08:36 2025	

THIS DOCUMENT AND THE TECHNICAL DATA DISCLOSED ARE PROPRIETARY TO CNIT TECHNOLOGIES CO., LTD. AND SHALL NOT BE DUPLICATED USED RELEASED OR DISCLOSED WITHOUT EXPRESSING WRITTEN PERMISSION.

CPU1 VDDIO

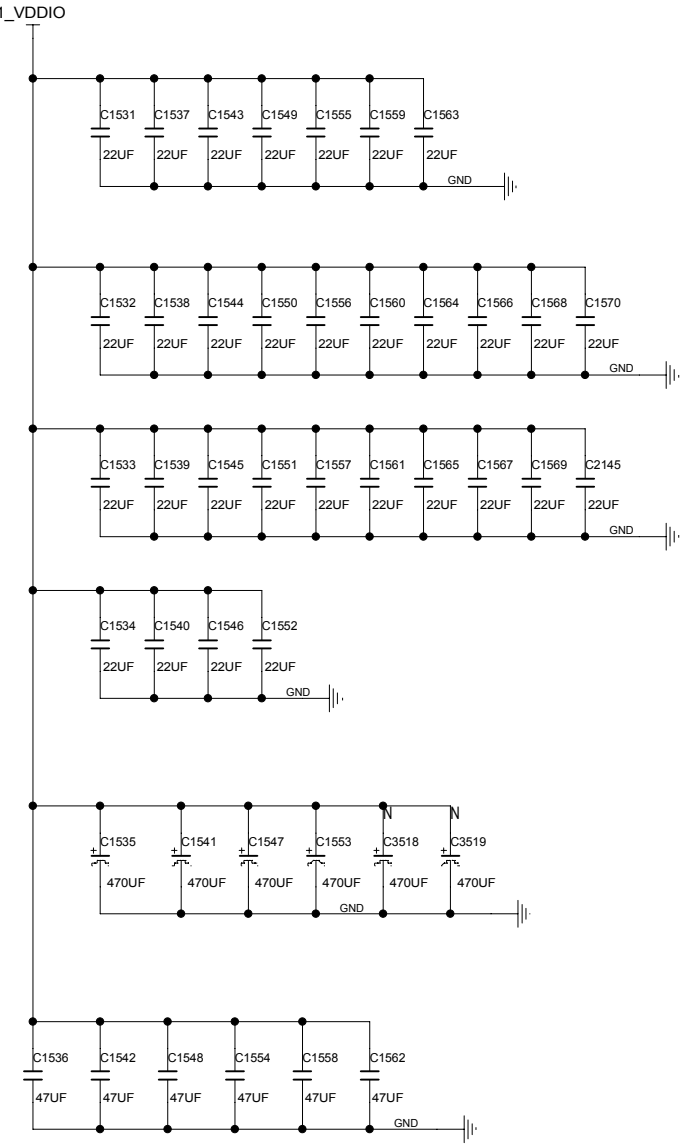

MODULE=---
FUNCTION=---

CNIT TECHNOLOGIES CO.,LTD.				
BOARD NAME MB-CADT24D_VERA			DRAWINGNO CNIT0302K1XKDL	
DESIGNED	yujianjiang00259	DATE <DATE_DN>	SHEET 116 OF 200	REV
REVIEWED	<REVIEWED>	DATE <DATE_RW>	Sat Sep 13 15:10:24 2025	

THIS DOCUMENT AND THE TECHNICAL DATA DISCLOSED ARE PROPRIETARY TO CNIT TECHNOLOGIES CO., LTD. AND SHALL NOT BE DUPLICATED USED RELEASED OR DISCLOSED WITHOUT EXPRESSING WRITTEN PERMISSION.

CPU0 VDD_18_S5&VDDIO_AUDIO

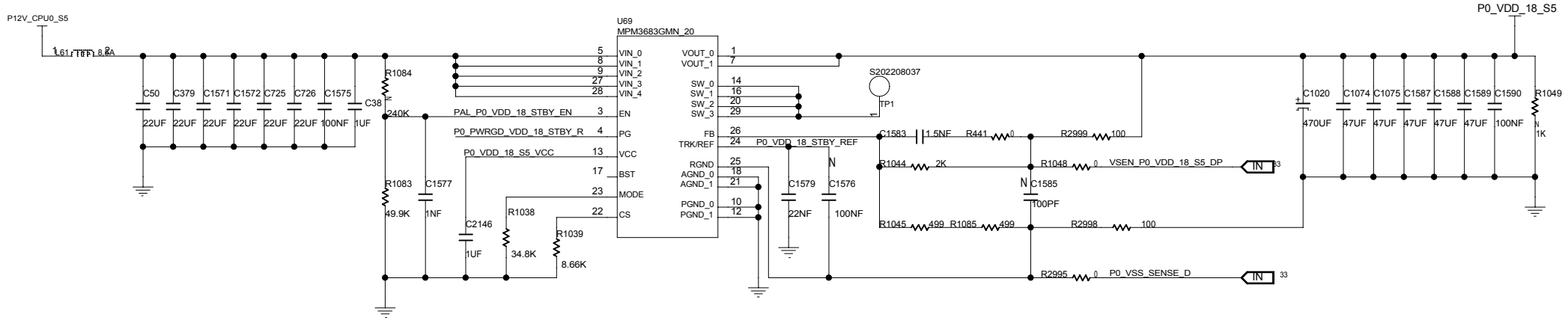

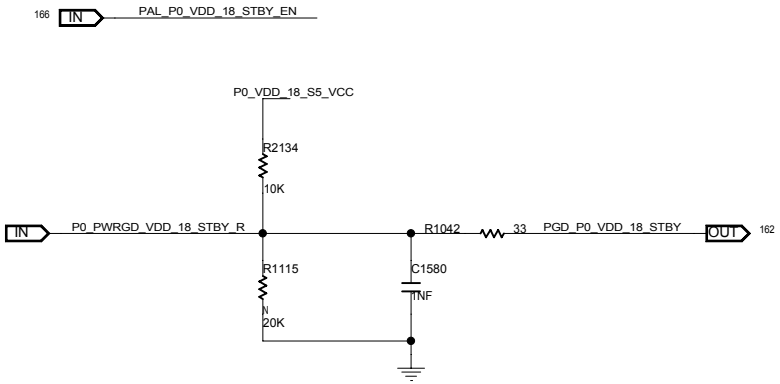

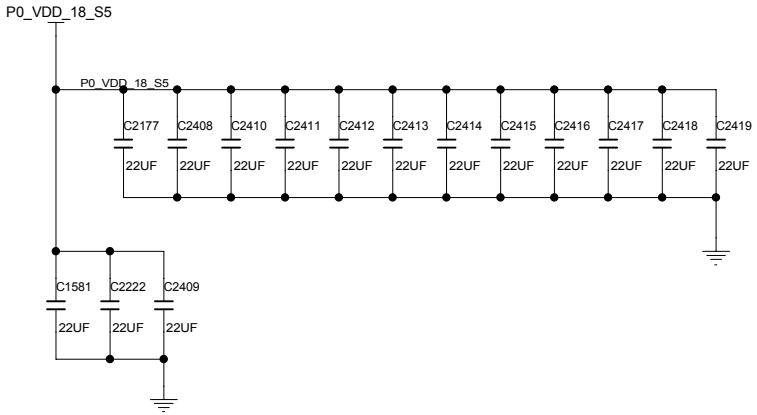

MODULE=---

FUNCTION=---

CNIT TECHNOLOGIES CO.,LTD.				
BOARD NAME MB-CADT24D_VERA			DRAWINGNO CNIT0302K1XKDL	
DESIGNED	yujianjiang00259	DATE <DATE_DN>	SHEET 117 OF 200	REV
REVIEWED	<REVIEWED>	DATE <DATE_RW>	Sat Sep 13 15:10:25 2025	

THIS DOCUMENT AND THE TECHNICAL DATA DISCLOSED ARE PROPRIETARY TO CNIT TECHNOLOGIES CO., LTD. AND SHALL NOT BE DUPLICATED USED RELEASED OR DISCLOSED WITHOUT EXPRESSING WRITTEN PERMISSION.

CPU1 VDD_18_S5&VDDIO_AUDIO

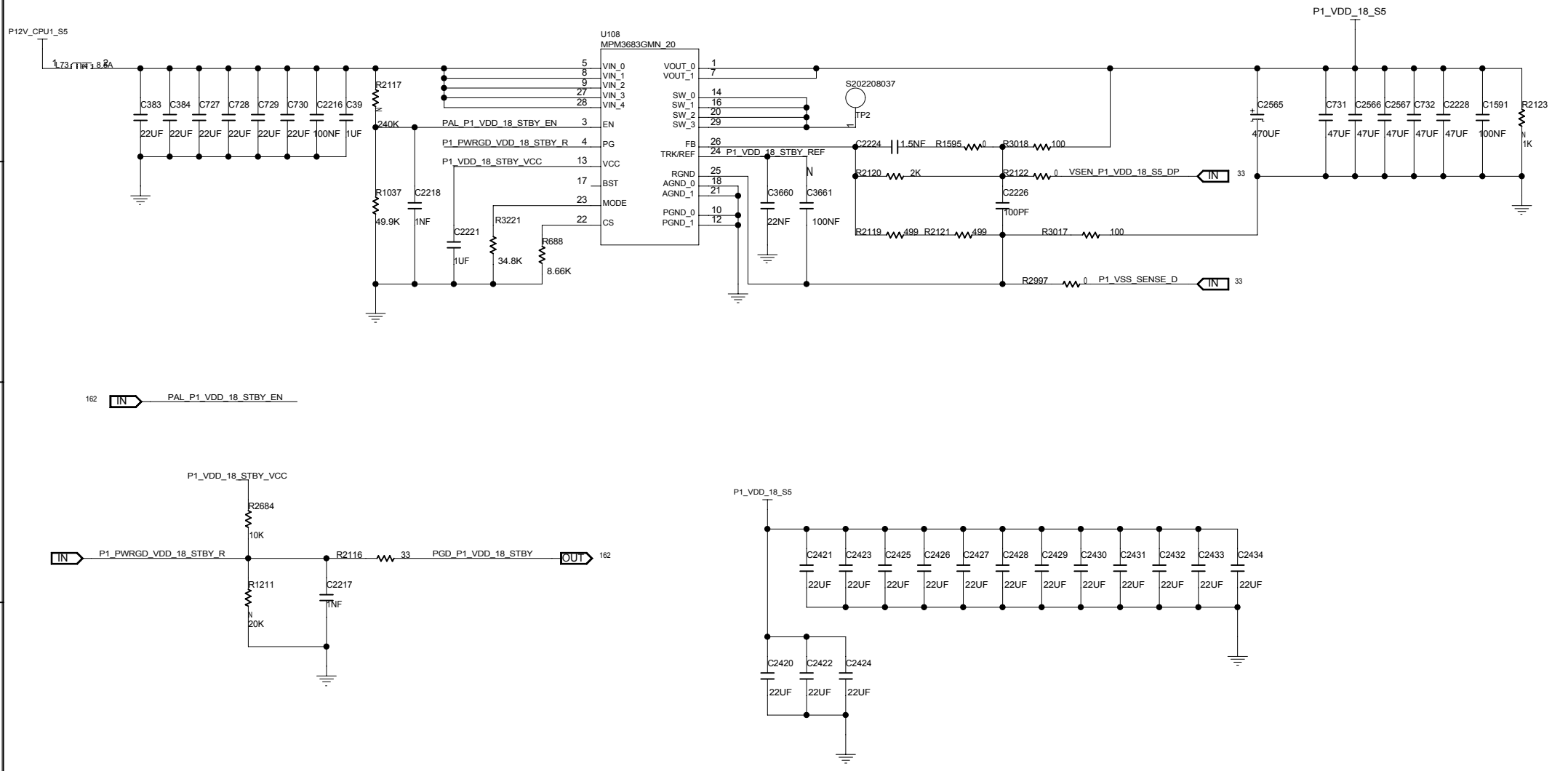

MODULE=---

FUNCTION=---

CNIT TECHNOLOGIES CO.,LTD.				
BOARD NAME MB-CADT24D_VERA			DRAWINGNO CNIT0302K1XKDL	
DESIGNED	yujianjiang00259	DATE <DATE_DN>	SHEET 118 OF 200	REV
REVIEWED	<REVIEWED>	DATE <DATE_RW>	Sat Sep 13 15:10:26 2025	

THIS DOCUMENT AND THE TECHNICAL DATA DISCLOSED ARE PROPRIETARY TO CNIT TECHNOLOGIES CO., LTD. AND SHALL NOT BE DUPLICATED USED RELEASED OR DISCLOSED WITHOUT EXPRESSING WRITTEN PERMISSION.

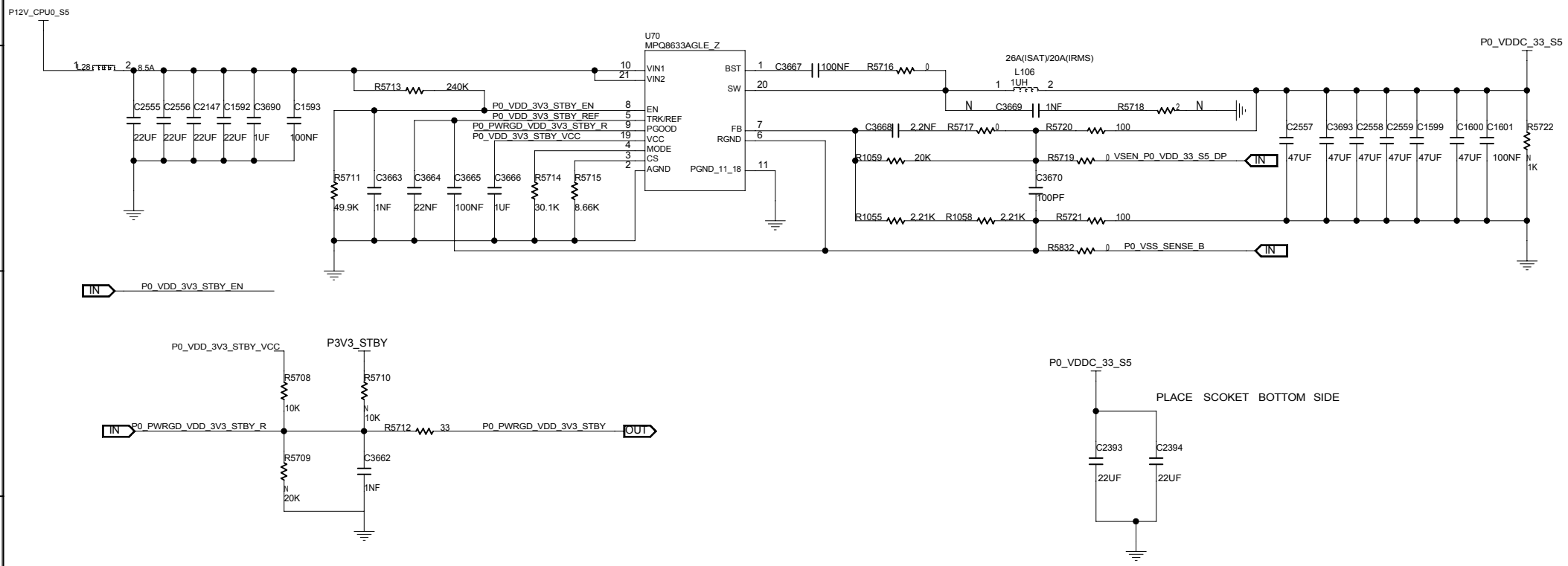

MODULE=---

FUNCTION=---

CNIT TECHNOLOGIES CO.,LTD.				
BOARD NAME MB-CADT24D_VERA			DRAWINGNO CNIT0302K1XKDL	
DESIGNED	yujianjiang00259	DATE <DATE_DN>	SHEET 119 OF 200	REV
REVIEWED	<REVIEWED>	DATE <DATE_RW>	Sat Sep 13 15:30:26 2025	

THIS DOCUMENT AND THE TECHNICAL DATA DISCLOSED ARE PROPRIETARY TO CNIT TECHNOLOGIES CO., LTD. AND SHALL NOT BE DUPLICATED USED RELEASED OR DISCLOSED WITHOUT EXPRESSING WRITTEN PERMISSION.

CPU1 VDDC_33_S5

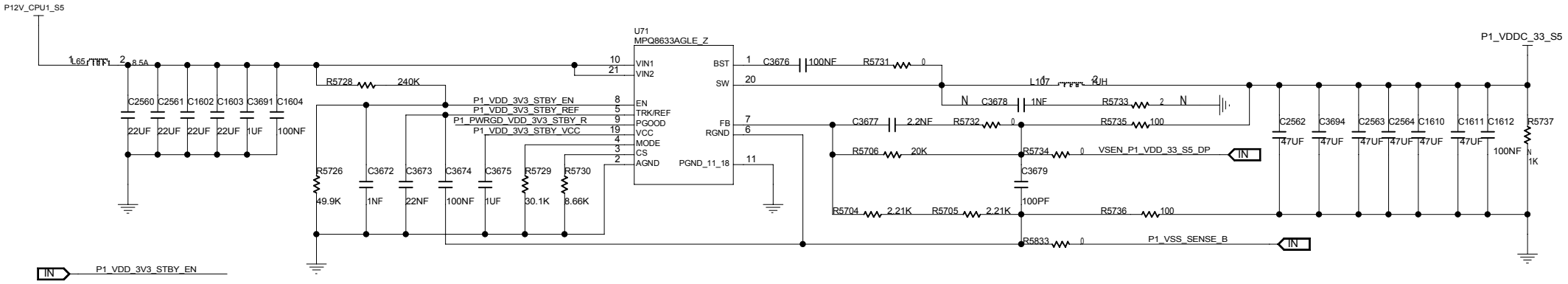

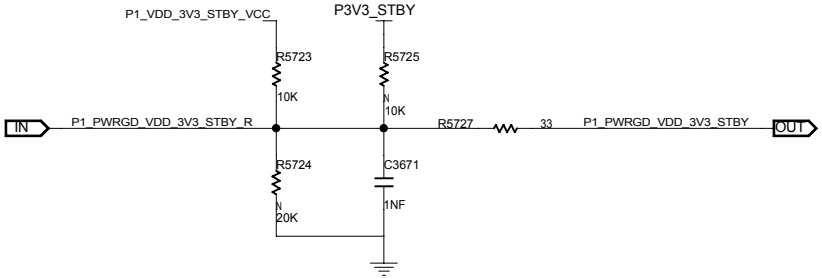

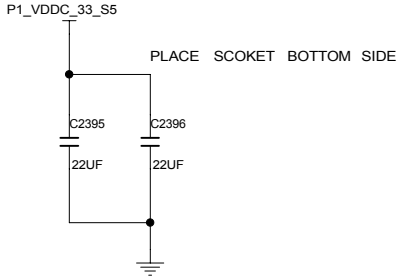

MODULE=---

FUNCTION=---

CNIT TECHNOLOGIES CO.,LTD.				
BOARD NAME MB-CADT24D_VERA			DRAWINGNO CNIT0302K1XKDL	
DESIGNED	yujianjiang00259	DATE <DATE_DN>	SHEET 120 OF 200	REV
REVIEWED	<REVIEWED>	DATE <DATE_RW>	Sat Sep 13 15:30:08 2025	

THIS DOCUMENT AND THE TECHNICAL DATA DISCLOSED ARE PROPRIETARY TO CNIT TECHNOLOGIES CO., LTD. AND SHALL NOT BE DUPLICATED USED RELEASED OR DISCLOSED WITHOUT EXPRESSING WRITTEN PERMISSION.

MPQ8626

VIN=12V VOUT=5V0
P5V_STBY

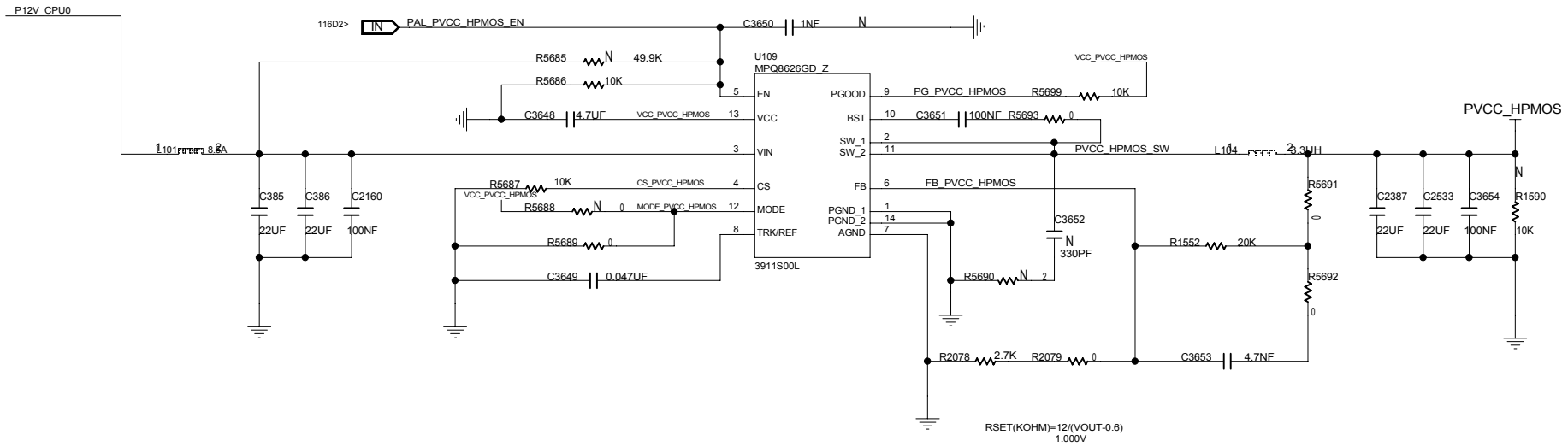

MODULE=---
FUNCTION=---

CNIT TECHNOLOGIES CO.,LTD.				
BOARD NAME MB-CADT24D_VERA			DRAWINGNO CNIT0302K1XKDL	
DESIGNED	yujianjiang00259	DATE <DATE_DN>	SHEET 121 OF 200	REV
REVIEWED	<REVIEWED>	DATE <DATE_RW>	Sat Sep 13 15:30:10 2025	

THIS DOCUMENT AND THE TECHNICAL DATA DISCLOSED ARE PROPRIETARY TO CNIT TECHNOLOGIES CO., LTD. AND SHALL NOT BE DUPLICATED USED RELEASED OR DISCLOSED WITHOUT EXPRESSING WRITTEN PERMISSION.

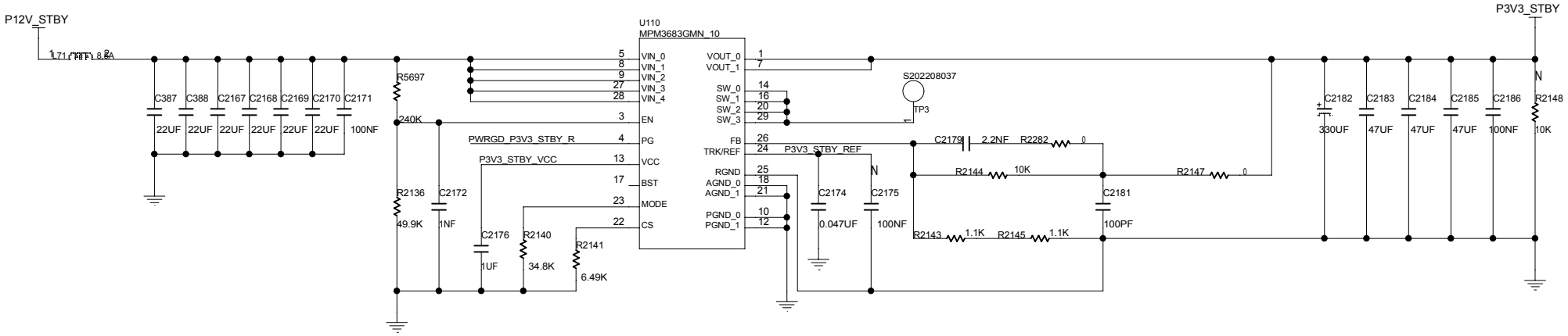

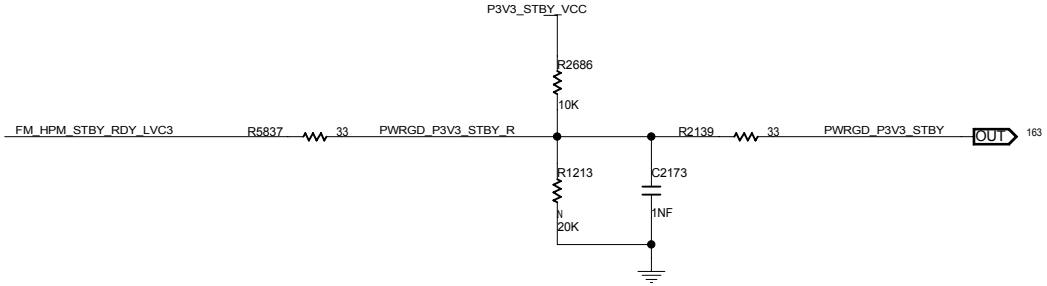

MODULE=---

FUNCTION=---

CNIT TECHNOLOGIES CO.,LTD.				
BOARD NAME MB-CADT24D_VERA			DRAWINGNO CNIT0302K1XKDL	
DESIGNED	yujianjiang00259	DATE <DATE_DN>	SHEET 122 OF 200	REV
REVIEWED	<REVIEWED>	DATE <DATE_RW>	Tue Sep 02 19:00:27 2025	

THIS DOCUMENT AND THE TECHNICAL DATA DISCLOSED ARE PROPRIETARY TO CNIT TECHNOLOGIES CO., LTD. AND SHALL NOT BE DUPLICATED USED RELEASED OR DISCLOSED WITHOUT EXPRESSING WRITTEN PERMISSION.

TPS7A8300

P1V8_STBY

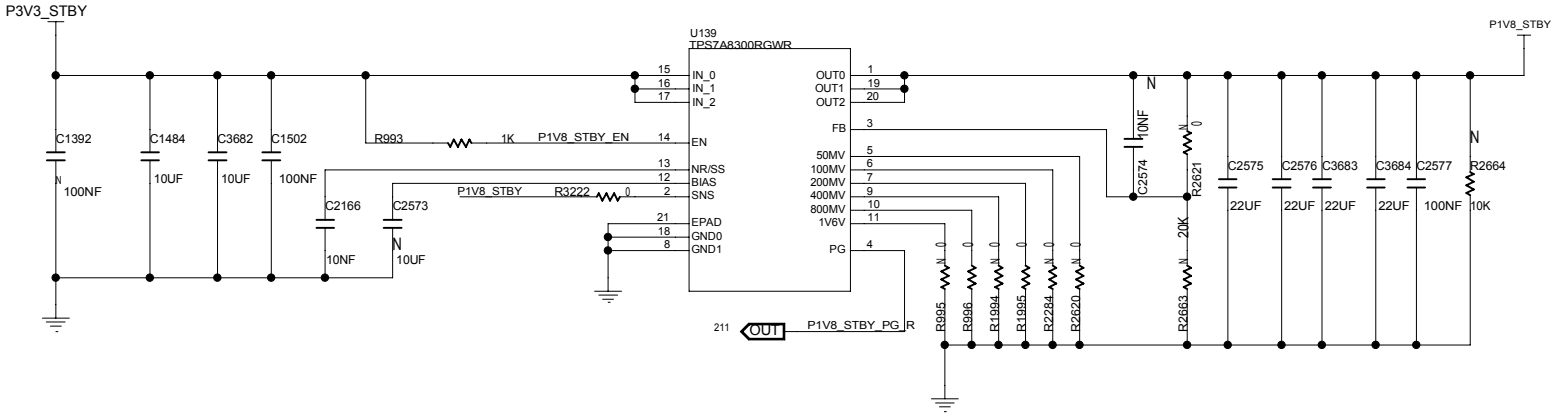

$V_{OUT} = V_{REF} + (\Sigma \text{ ANY-OUT Pins to Ground})$ (1)

Table 1. ANY-OUT Programmable Output Voltage

ANY-OUT PROGRAM PIN$ (Active Low)	ADDITIVE OUTPUT VOLTAGE LEVEL
Pin 5 (50mV)	50 mV
Pin 6 (100mV)	100 mV
Pin 7 (200mV)	200 mV
Pin 9 (400mV)	400 mV
Pin 10 (800mV)	800 mV
Pin 11 (1.6V)	1.6 V

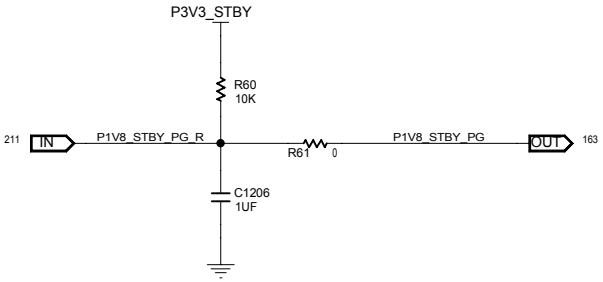

MODULE=---

FUNCTION=---

CNIT TECHNOLOGIES CO.,LTD.				
BOARD NAME MB-CADT24D_VERA			DRAWINGNO CNIT0302K1XKDL	
DESIGNED	yujianjiang00259	DATE <DATE_DN>	SHEET 123 OF 200	REV
REVIEWED	<REVIEWED>	DATE <DATE_RW>	Tue Sep 02 20:29:16 2025	

THIS DOCUMENT AND THE TECHNICAL DATA DISCLOSED ARE PROPRIETARY TO CNIT TECHNOLOGIES CO., LTD. AND SHALL NOT BE DUPLICATED USED RELEASED OR DISCLOSED WITHOUT EXPRESSING WRITTEN PERMISSION.

MP5022

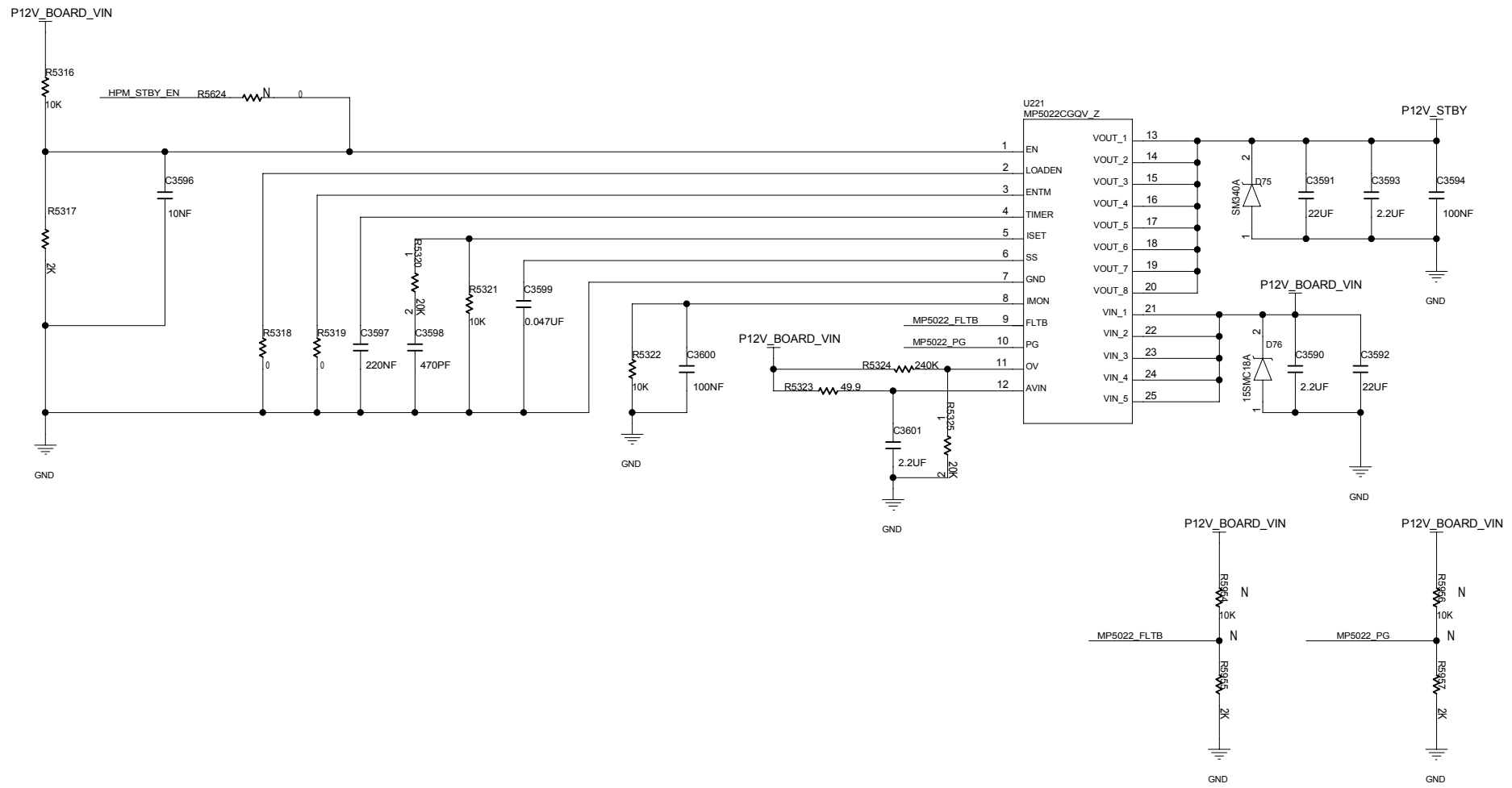

MODULE=---

FUNCTION=---

CNIT TECHNOLOGIES CO.,LTD.				
BOARD NAME	MB-CADT24D_VERA		DRAWINGNO	CNIT0302K1XKDL
DESIGNED	yujianjiang00259	DATE <DATE_DN>	SHEET 124 OF 200	REV
REVIEWED	<REVIEWED>	DATE <DATE_RW>	Sat Sep 13 15:30:18 2025	

THIS DOCUMENT AND THE TECHNICAL DATA DISCLOSED ARE PROPRIETARY TO CNIT TECHNOLOGIES CO., LTD. AND SHALL NOT BE DUPLICATED USED RELEASED OR DISCLOSED WITHOUT EXPRESSING WRITTEN PERMISSION.

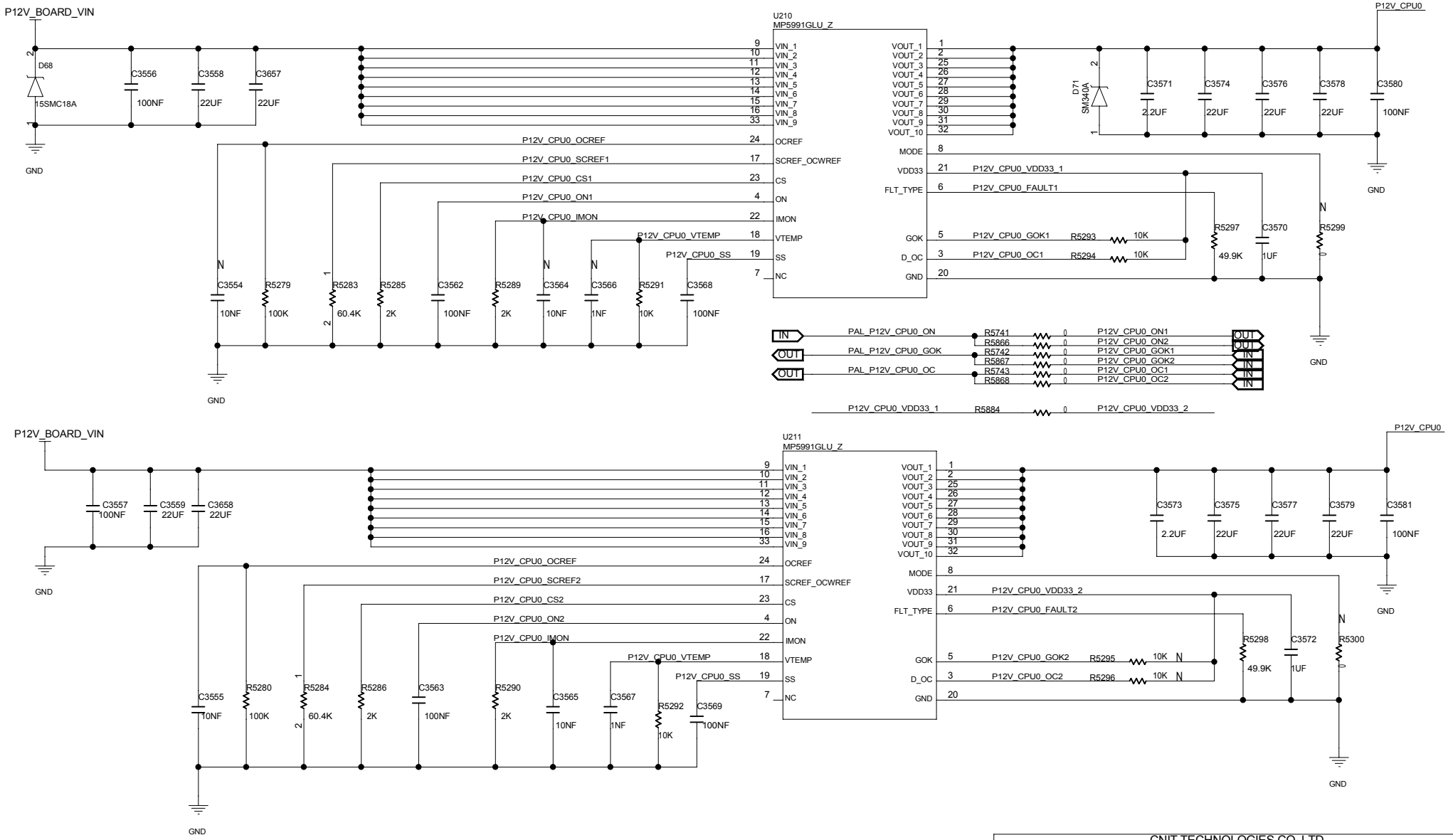

MODULE=---

FUNCTION=---

CNIT TECHNOLOGIES CO.,LTD.				
BOARD NAME	MB-CADT24D_VERA		DRAWINGNO	CNIT0302K1XKDL
DESIGNED	yujianjiang00259	DATE <DATE_DN>	SHEET 125 OF 200	REV
REVIEWED	<REVIEWED>	DATE <DATE_RW>	Sat Sep 13 15:30:19 2025	

THIS DOCUMENT AND THE TECHNICAL DATA DISCLOSED ARE PROPRIETARY TO CNIT TECHNOLOGIES CO., LTD. AND SHALL NOT BE DUPLICATED USED RELEASED OR DISCLOSED WITHOUT EXPRESSING WRITTEN PERMISSION.

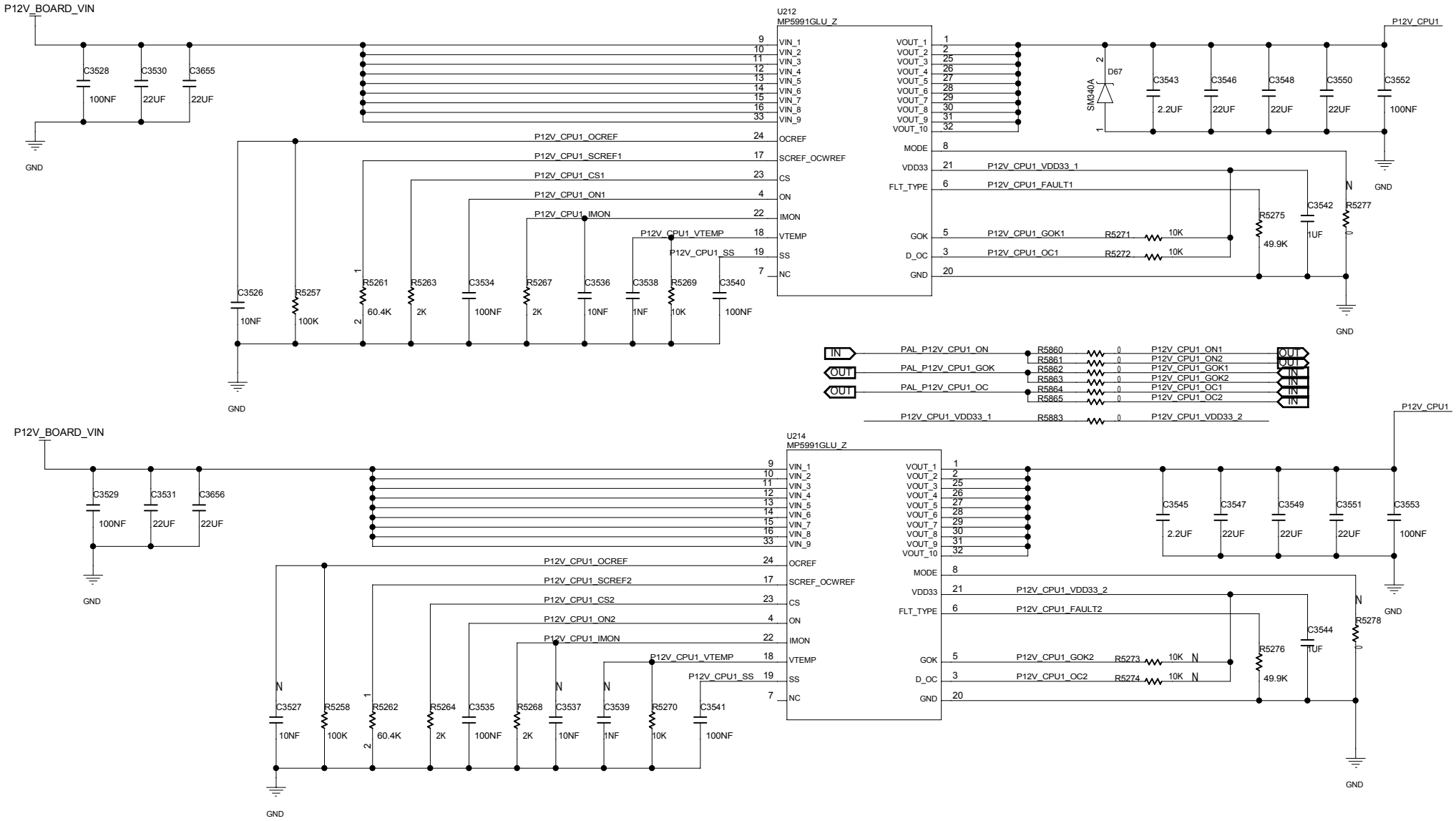

CNIT TECHNOLOGIES CO.,LTD.				
BOARD NAME MB-CADT24D_VERA			DRAWINGNO CNIT0302K1XKDL	
DESIGNED	yujianjiang00259	DATE <DATE_DN>	SHEET 126 OF 200	REV
REVIEWED	<REVIEWED>	DATE <DATE_RW>	Sat Sep 13 15:30:20 2025	

THIS DOCUMENT AND THE TECHNICAL DATA DISCLOSED ARE PROPRIETARY TO CNIT TECHNOLOGIES CO., LTD. AND SHALL NOT BE DUPLICATED USED RELEASED OR DISCLOSED WITHOUT EXPRESSING WRITTEN PERMISSION.

MODULE=---

FUNCTION=---

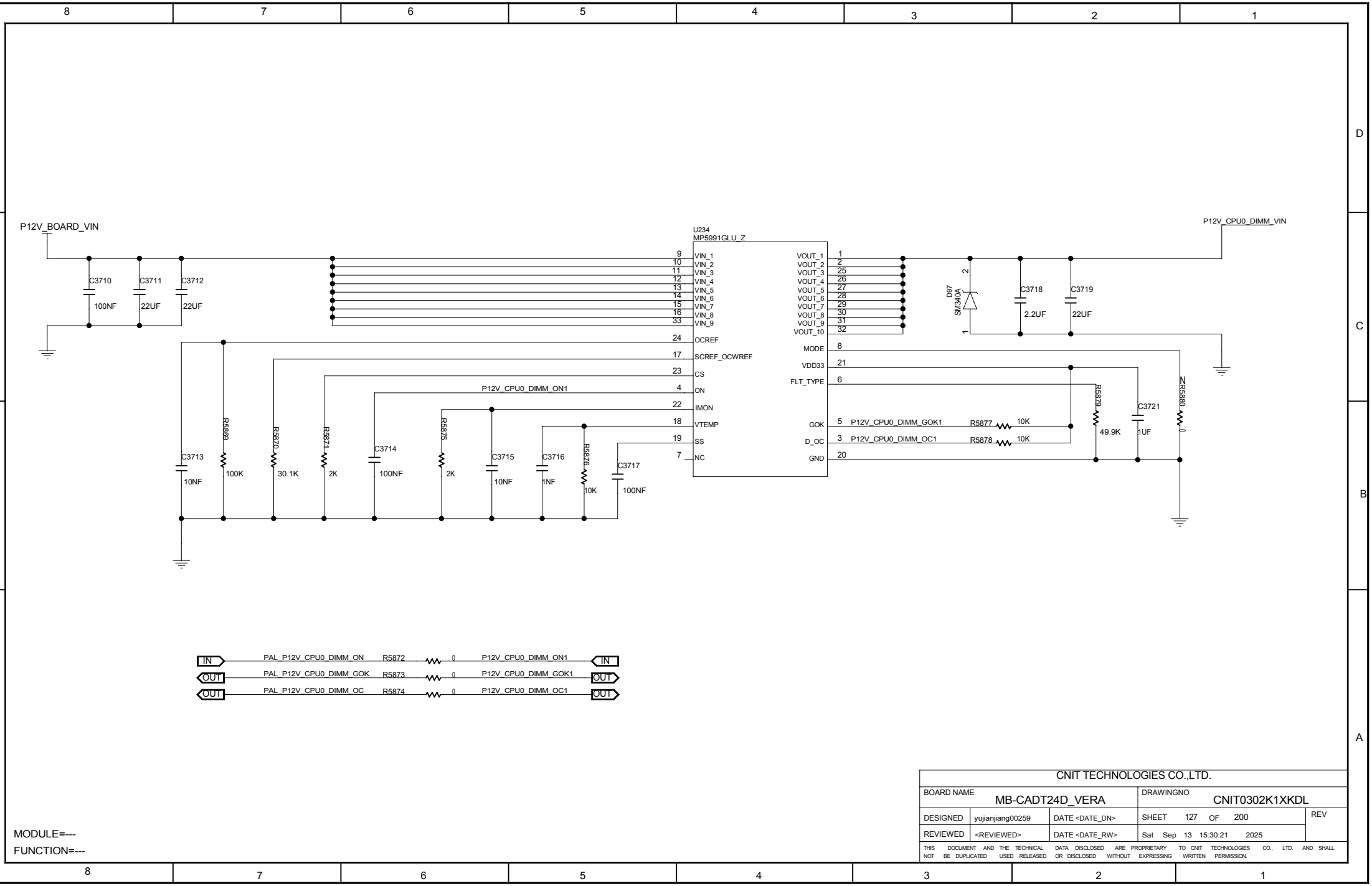

MODULE=---

FUNCTION=---

CNIT TECHNOLOGIES CO.,LTD.				
BOARD NAME	MB-CADT24D_VERA		DRAWINGNO	CNIT0302K1XKDL
DESIGNED	yujianjiang00259	DATE <DATE_DN>	SHEET 127 OF 200	REV
REVIEWED	<REVIEWED>	DATE <DATE_RW>	Sat Sep 13 15:30:21 2025	

THIS DOCUMENT AND THE TECHNICAL DATA DISCLOSED ARE PROPRIETARY TO CNIT TECHNOLOGIES CO., LTD. AND SHALL NOT BE DUPLICATED USED RELEASED OR DISCLOSED WITHOUT EXPRESSING WRITTEN PERMISSION.

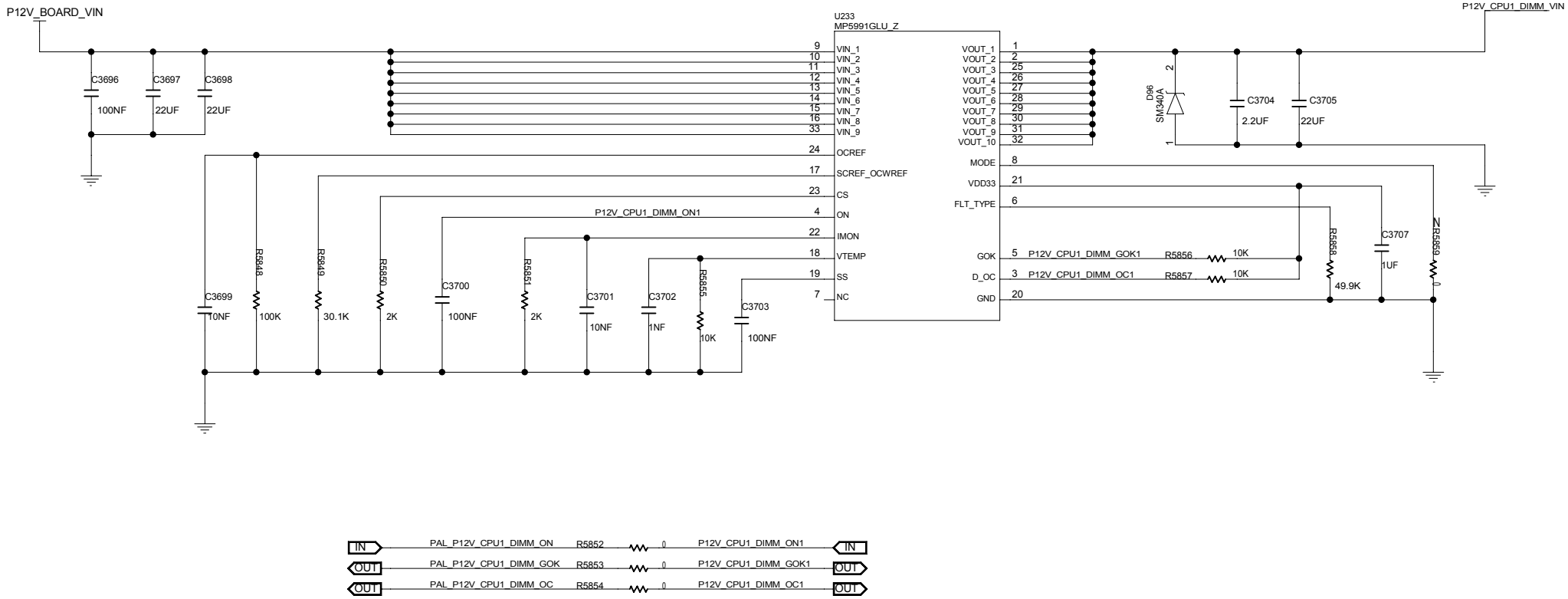

MODULE=---

FUNCTION=---

CNIT TECHNOLOGIES CO.,LTD.				
BOARD NAME MB-CADT24D_VERA			DRAWINGNO CNIT0302K1XKDL	
DESIGNED	yujianjiang00259	DATE <DATE_DN>	SHEET 128 OF 200	REV
REVIEWED	<REVIEWED>	DATE <DATE_RW>	Sat Sep 13 15:30:21 2025	

THIS DOCUMENT AND THE TECHNICAL DATA DISCLOSED ARE PROPRIETARY TO CNIT TECHNOLOGIES CO., LTD. AND SHALL NOT BE DUPLICATED USED RELEASED OR DISCLOSED WITHOUT EXPRESSING WRITTEN PERMISSION.

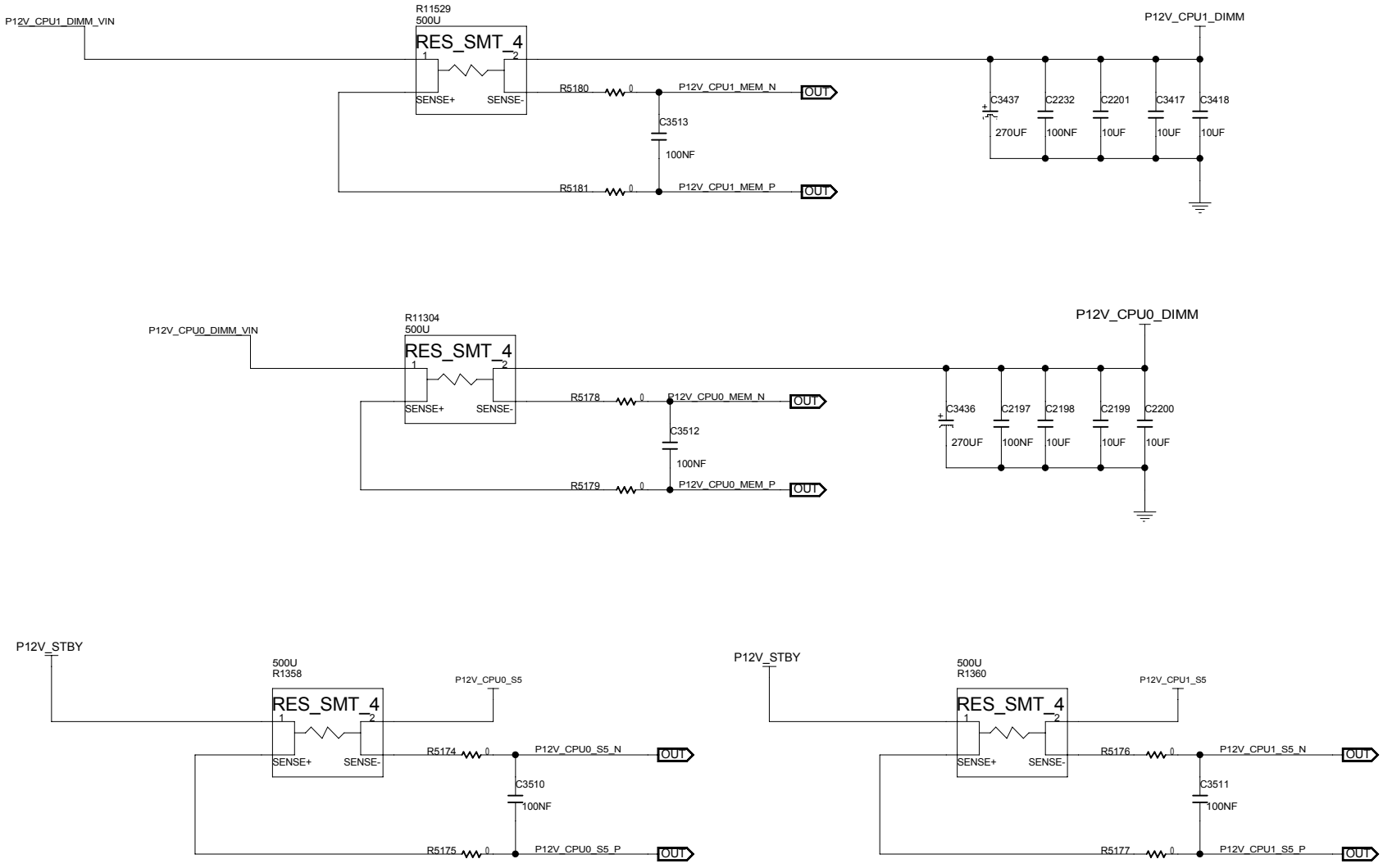

MODULE=---

FUNCTION=---

CNIT TECHNOLOGIES CO.,LTD.				
BOARD NAME MB-CADT24D_VERA			DRAWINGNO CNIT0302K1XKDL	
DESIGNED	yujianjiang00259	DATE <DATE_DN>	SHEET 129 OF 200	REV
REVIEWED	<REVIEWED>	DATE <DATE_RW>	Tue Sep 02 13:32:13 2025	

THIS DOCUMENT AND THE TECHNICAL DATA DISCLOSED ARE PROPRIETARY TO CNIT TECHNOLOGIES CO., LTD. AND SHALL NOT BE DUPLICATED USED RELEASED OR DISCLOSED WITHOUT EXPRESSING WRITTEN PERMISSION.

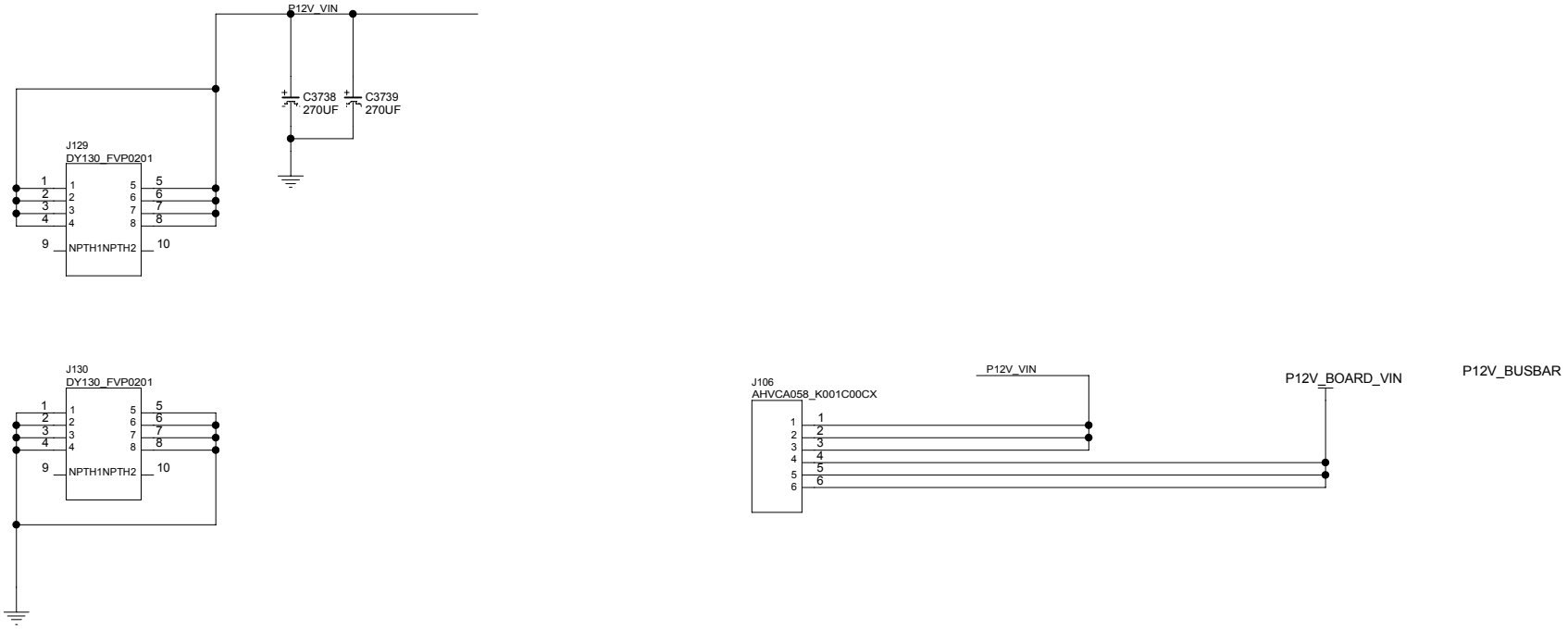

MODULE=---

FUNCTION=---

CNIT TECHNOLOGIES CO.,LTD.				
BOARD NAME MB-CADT24D_VERA			DRAWINGNO CNIT0302K1XKDL	
DESIGNED	yujianjiang00259	DATE <DATE_DN>	SHEET 130 OF 200	REV
REVIEWED	<REVIEWED>	DATE <DATE_RW>	Sat Sep 06 16:27:52 2025	

THIS DOCUMENT AND THE TECHNICAL DATA DISCLOSED ARE PROPRIETARY TO CNIT TECHNOLOGIES CO., LTD. AND SHALL NOT BE DUPLICATED USED RELEASED OR DISCLOSED WITHOUT EXPRESSING WRITTEN PERMISSION.

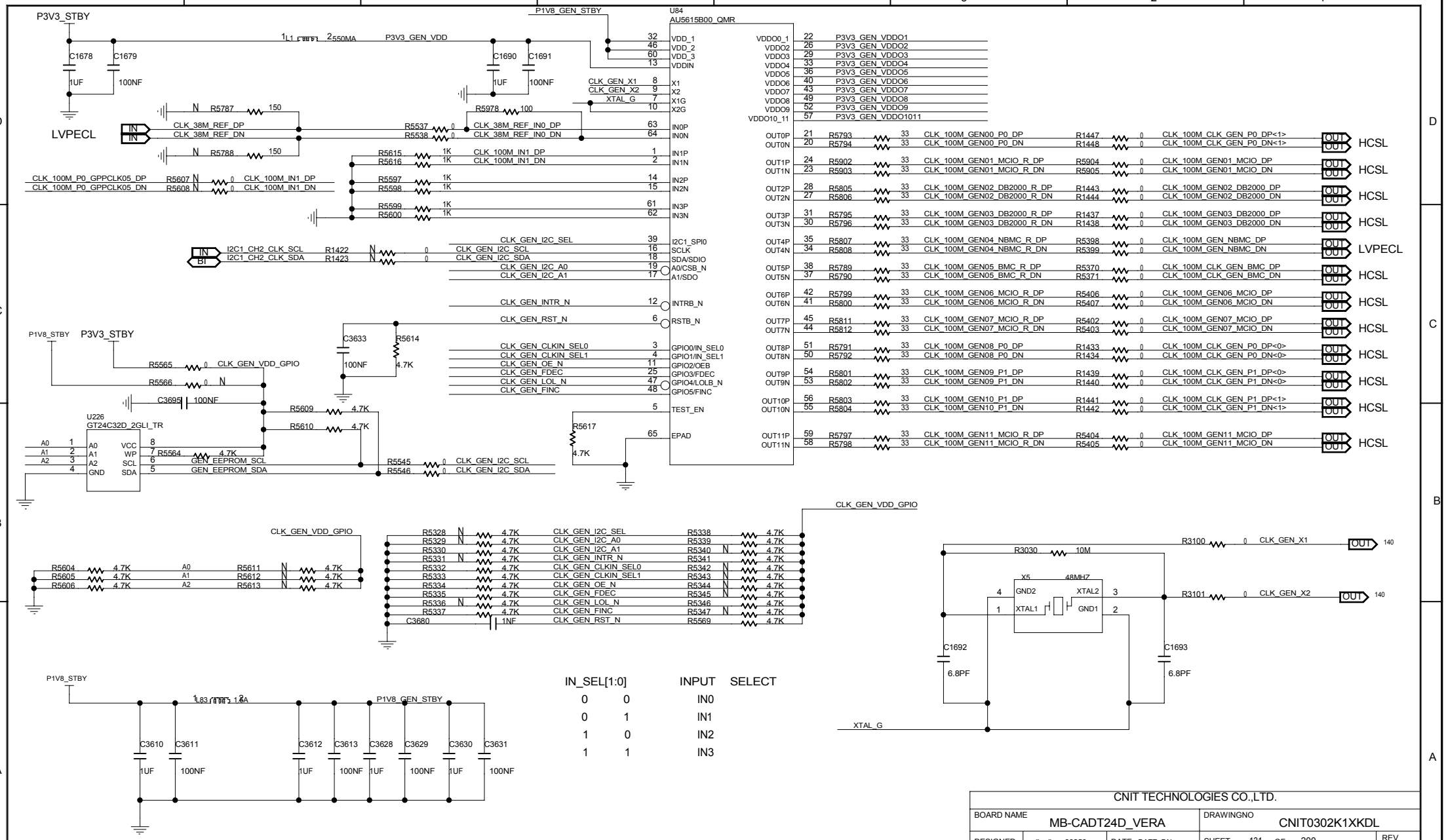
P3V3_STBY
L1
550MA
P3V3_GEN_VDD
C1678
C1679
1UF
100NF
C1690
C1691
P1V8_GEN_STBY
U84
AU5615B00_QMR
VDD_1
VDD_2
VDD_3
VDDIN
X1
X2
X1G
X2G
CLK_GEN_X1
CLK_GEN_X2
XTAL_G
R5978
100
R5787
150
R5788
150
LVPECL
CLK_38M_REF_DP
CLK_38M_REF_DN
R5537
R5538
CLK_38M_REF_IN0_DP
CLK_38M_REF_IN0_DN
IN0P
IN0N
R5615
R5616
1K
CLK_100M_IN1_DP
CLK_100M_IN1_DN
IN1P
IN1N
CLK_100M_P0_GPPCLK05_DP
CLK_100M_P0_GPPCLK05_DN
R5607
R5608
CLK_100M_IN1_DP
CLK_100M_IN1_DN
R5597
R5598
IN2P
IN2N
R5599
R5600
IN3P
IN3N
I2C1_CH2_CLK_SCL
I2C1_CH2_CLK_SDA
R1422
R1423
CLK_GEN_I2C_SEL
CLK_GEN_I2C_SCL
CLK_GEN_I2C_SDA
I2C1_SPI0
SCLK
SDA/SDIO
CLK_GEN_I2C_A0
CLK_GEN_I2C_A1
A0/CSB_N
A1/SDO
CLK_GEN_INTR_N
INTRB_N
CLK_GEN_RST_N
RSTB_N
P1V8_STBY
P3V3_STBY
C3633
100NF
R5614
4.7K
R5565
CLK_GEN_VDD_GPIO
R5566
C3695
100NF
CLK_GEN_CLKIN_SEL0
CLK_GEN_CLKIN_SEL1
CLK_GEN_OE_N
CLK_GEN_FDEC
CLK_GEN_LOL_N
CLK_GEN_FINC
GPIO0/IN_SEL0
GPIO1/IN_SEL1
GPIO2/OEB
GPIO3/FDEC
GPIO4/LOLB_N
GPIO5/FINC
TEST_EN
EPAD
R5617
4.7K
U226
GT24C32D_2GLI_TR
A0
A1
A2
GND
VCC
WP
SCL
SDA
R5609
R5610
4.7K
R5564
GEN_EEPROM_SCL
GEN_EEPROM_SDA
R5545
R5546
CLK_GEN_I2C_SCL
CLK_GEN_I2C_SDA
VDDO0_1
VDDO2
VDDO3
VDDO4
VDDO5
VDDO6
VDDO7
VDDO8
VDDO9
VDDO10_11
P3V3_GEN_VDDO1
P3V3_GEN_VDDO2
P3V3_GEN_VDDO3
P3V3_GEN_VDDO4
P3V3_GEN_VDDO5
P3V3_GEN_VDDO6
P3V3_GEN_VDDO7
P3V3_GEN_VDDO8
P3V3_GEN_VDDO9
P3V3_GEN_VDDO1011
OUT0P
OUT0N
R5793
R5794
33
CLK_100M_GEN00_P0_DP
CLK_100M_GEN00_P0_DN
R1447
R1448
CLK_100M_CLK_GEN_P0_DP<1>
CLK_100M_CLK_GEN_P0_DN<1>
HCSL
OUT1P
OUT1N
R5902
R5903
CLK_100M_GEN01_MCIO_R_DP
CLK_100M_GEN01_MCIO_R_DN
R5904
R5905
CLK_100M_GEN01_MCIO_DP
CLK_100M_GEN01_MCIO_DN
HCSL
OUT2P
OUT2N
R5805
R5806
CLK_100M_GEN02_DB2000_R_DP
CLK_100M_GEN02_DB2000_R_DN
R1443
R1444
CLK_100M_GEN02_DB2000_DP
CLK_100M_GEN02_DB2000_DN
HCSL
OUT3P
OUT3N
R5795
R5796
CLK_100M_GEN03_DB2000_R_DP
CLK_100M_GEN03_DB2000_R_DN
R1437
R1438
CLK_100M_GEN03_DB2000_DP
CLK_100M_GEN03_DB2000_DN
HCSL
OUT4P
OUT4N
R5807
R5808
CLK_100M_GEN04_NBMC_R_DP
CLK_100M_GEN04_NBMC_R_DN
R5398
R5399
CLK_100M_GEN_NBMC_DP
CLK_100M_GEN_NBMC_DN
LVPECL
OUT5P
OUT5N
R5789
R5790
CLK_100M_GEN05_BMC_R_DP
CLK_100M_GEN05_BMC_R_DN
R5370
R5371
CLK_100M_CLK_GEN_BMC_DP
CLK_100M_CLK_GEN_BMC_DN
HCSL
OUT6P
OUT6N
R5799
R5800
CLK_100M_GEN06_MCIO_R_DP
CLK_100M_GEN06_MCIO_R_DN
R5406
R5407
CLK_100M_GEN06_MCIO_DP
CLK_100M_GEN06_MCIO_DN
HCSL
OUT7P
OUT7N
R5811
R5812
CLK_100M_GEN07_MCIO_R_DP
CLK_100M_GEN07_MCIO_R_DN
R5402
R5403
CLK_100M_GEN07_MCIO_DP
CLK_100M_GEN07_MCIO_DN
HCSL
OUT8P
OUT8N
R5791
R5792
CLK_100M_GEN08_P0_DP
CLK_100M_GEN08_P0_DN
R1433
R1434
CLK_100M_CLK_GEN_P0_DP<0>
CLK_100M_CLK_GEN_P0_DN<0>
HCSL
OUT9P
OUT9N
R5801
R5802
CLK_100M_GEN09_P1_DP
CLK_100M_GEN09_P1_DN
R1439
R1440
CLK_100M_CLK_GEN_P1_DP<0>
CLK_100M_CLK_GEN_P1_DN<0>
HCSL
OUT10P
OUT10N
R5803
R5804
CLK_100M_GEN10_P1_DP
CLK_100M_GEN10_P1_DN
R1441
R1442
CLK_100M_CLK_GEN_P1_DP<1>
CLK_100M_CLK_GEN_P1_DN<1>
HCSL
OUT11P
OUT11N
R5797
R5798
CLK_100M_GEN11_MCIO_R_DP
CLK_100M_GEN11_MCIO_R_DN
R5404
R5405
CLK_100M_GEN11_MCIO_DP
CLK_100M_GEN11_MCIO_DN
HCSL
CLK_GEN_VDD_GPIO
R5604
R5605
R5606
4.7K
A0
A1
A2
R5611
R5612
R5613
R5328
R5329
R5330
R5331
R5332
R5333
R5334
R5335
R5336
R5337
C3680
1NF
R5338
R5339
R5340
R5341
R5342
R5343
R5344
R5345
R5346
R5347
R5569
R3100
CLK_GEN_X1
R3030
10M
X5
48MHZ
GND2
XTAL2
XTAL1
GND1
R3101
CLK_GEN_X2
C1692
6.8PF
C1693
6.8PF
XTAL_G
P1V8_STBY
L83
1.6A
P1V8_GEN_STBY
C3610
C3611
C3612
C3613
C3628
C3629
C3630
C3631
1UF
100NF
IN_SEL[1:0]
INPUT SELECT
0 0 IN0
0 1 IN1
1 0 IN2
1 1 IN3
MODULE=---
FUNCTION=---
CNIT TECHNOLOGIES CO.,LTD.
BOARD NAME
MB-CADT24D_VERA
DRAWINGNO
CNIT0302K1XKDL
DESIGNED
yujianjiang00259
DATE <DATE_DN>
SHEET 131 OF 200
REV
REVIEWED
<REVIEWED>
DATE <DATE_RW>
Tue Sep 16 09:02:23 2025
THIS DOCUMENT AND THE TECHNICAL DATA DISCLOSED ARE PROPRIETARY TO CNIT TECHNOLOGIES CO., LTD. AND SHALL NOT BE DUPLICATED USED RELEASED OR DISCLOSED WITHOUT EXPRESSING WRITTEN PERMISSION.

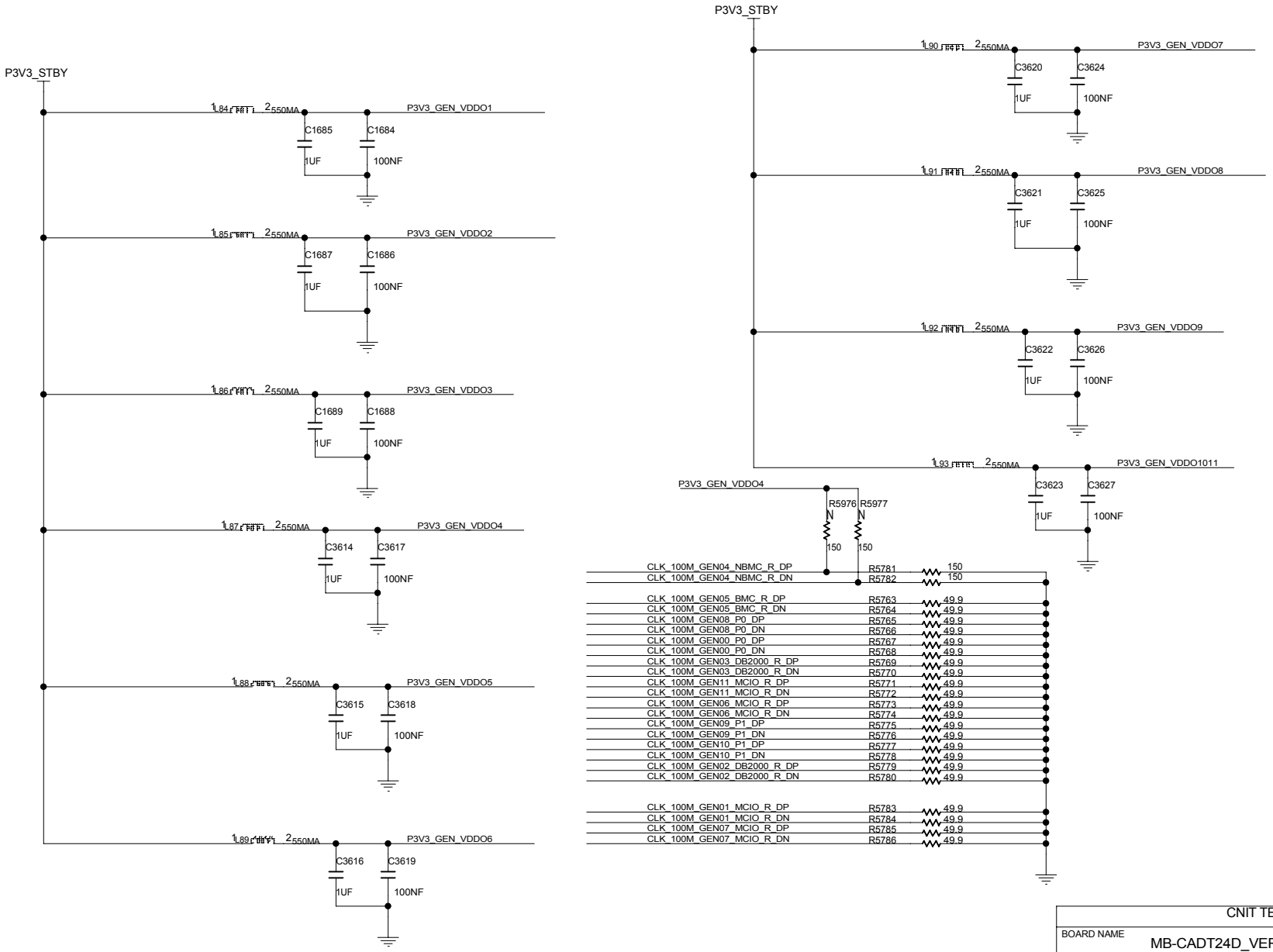

MODULE=---

FUNCTION=---

CNIT TECHNOLOGIES CO.,LTD.				
BOARD NAME MB-CADT24D_VERA			DRAWINGNO CNIT0302K1XKDL	
DESIGNED	yujianjiang00259	DATE <DATE_DN>	SHEET 132 OF 200	REV
REVIEWED	<REVIEWED>	DATE <DATE_RW>	Thu Sep 11 10:58:12 2025	

THIS DOCUMENT AND THE TECHNICAL DATA DISCLOSED ARE PROPRIETARY TO CNIT TECHNOLOGIES CO., LTD. AND SHALL NOT BE DUPLICATED USED RELEASED OR DISCLOSED WITHOUT EXPRESSING WRITTEN PERMISSION.

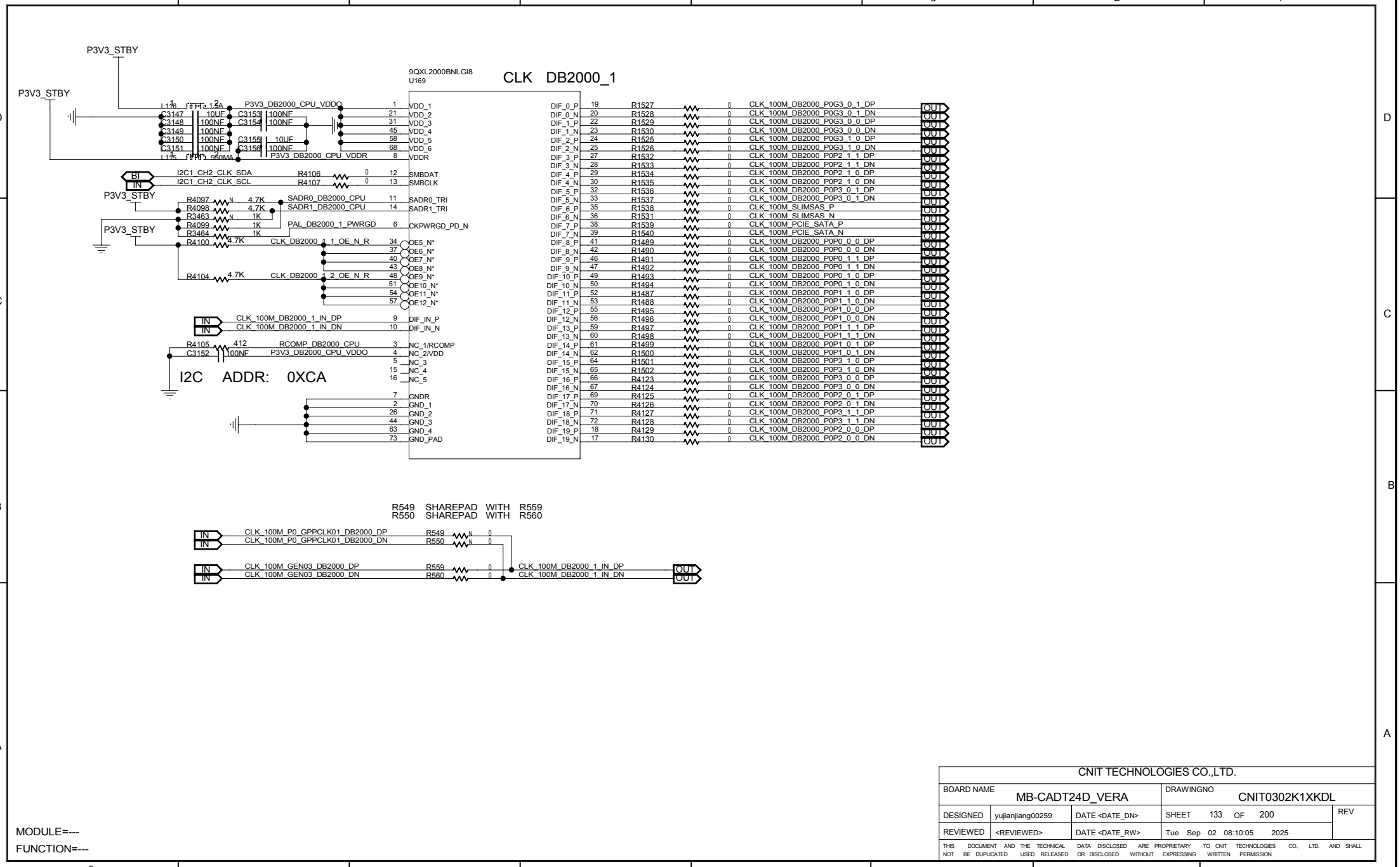

MODULE=---

FUNCTION=---

CNIT TECHNOLOGIES CO.,LTD.				
BOARD NAME MB-CADT24D_VERA			DRAWINGNO CNIT0302K1XKDL	
DESIGNED	yujianjiang00259	DATE <DATE_DN>	SHEET 133 OF 200	REV
REVIEWED	<REVIEWED>	DATE <DATE_RW>	Tue Sep 02 08:10:05 2025	

THIS DOCUMENT AND THE TECHNICAL DATA DISCLOSED ARE PROPRIETARY TO CNIT TECHNOLOGIES CO., LTD. AND SHALL NOT BE DUPLICATED USED RELEASED OR DISCLOSED WITHOUT EXPRESSING WRITTEN PERMISSION.

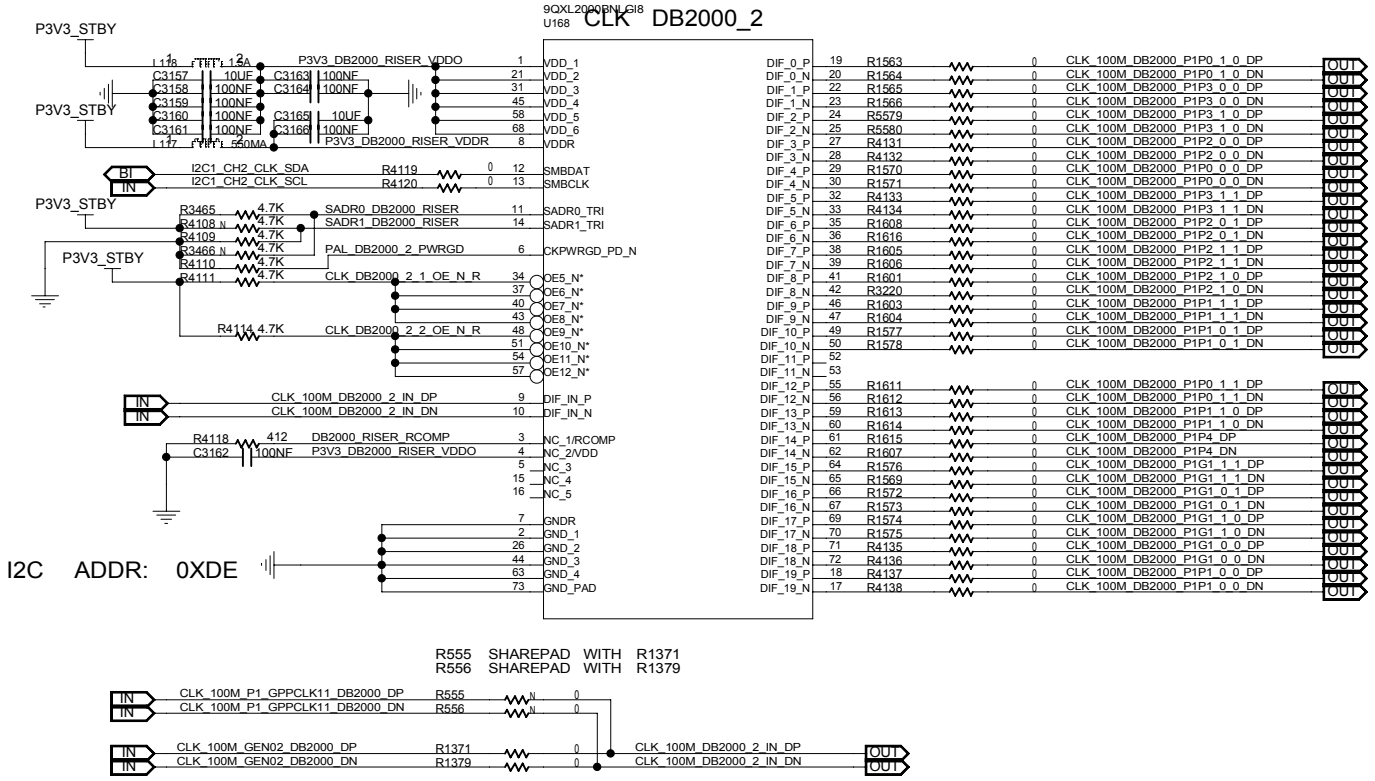

MODULE=---

FUNCTION=---

CNIT TECHNOLOGIES CO.,LTD.				
BOARD NAME MB-CADT24D_VERA			DRAWINGNO CNIT0302K1XKDL	
DESIGNED	yujianjiang00259	DATE <DATE_DN>	SHEET 134 OF 200	REV
REVIEWED	<REVIEWED>	DATE <DATE_RW>	Thu Sep 11 11:04:55 2025	

THIS DOCUMENT AND THE TECHNICAL DATA DISCLOSED ARE PROPRIETARY TO CNIT TECHNOLOGIES CO., LTD. AND SHALL NOT BE DUPLICATED USED RELEASED OR DISCLOSED WITHOUT EXPRESSING WRITTEN PERMISSION.

MCIO:P0G3

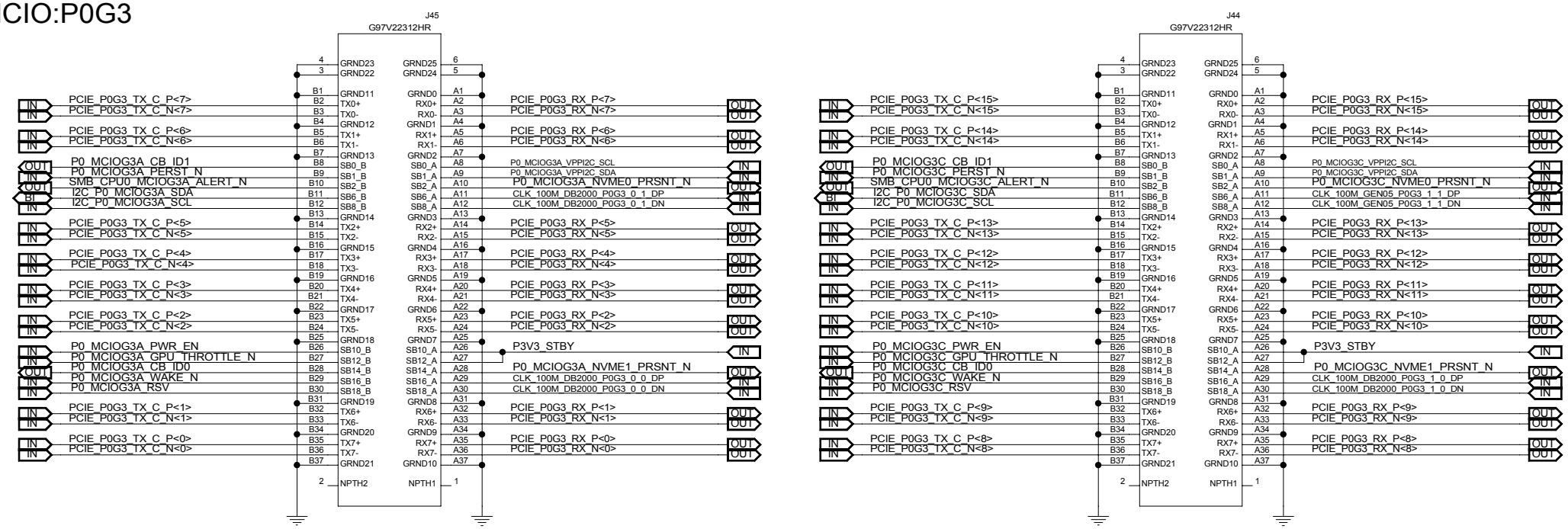

MODULE=---

FUNCTION=---

CNIT TECHNOLOGIES CO.,LTD.				
BOARD NAME MB-CADT24D_VERA			DRAWINGNO CNIT0302K1XKDL	
DESIGNED	yujianjiang00259	DATE <DATE_DN>	SHEET 135 OF 200	REV
REVIEWED	<REVIEWED>	DATE <DATE_RW>	Sat Sep 13 15:37:51 2025	

THIS DOCUMENT AND THE TECHNICAL DATA DISCLOSED ARE PROPRIETARY TO CNIT TECHNOLOGIES CO., LTD. AND SHALL NOT BE DUPLICATED USED RELEASED OR DISCLOSED WITHOUT EXPRESSING WRITTEN PERMISSION.

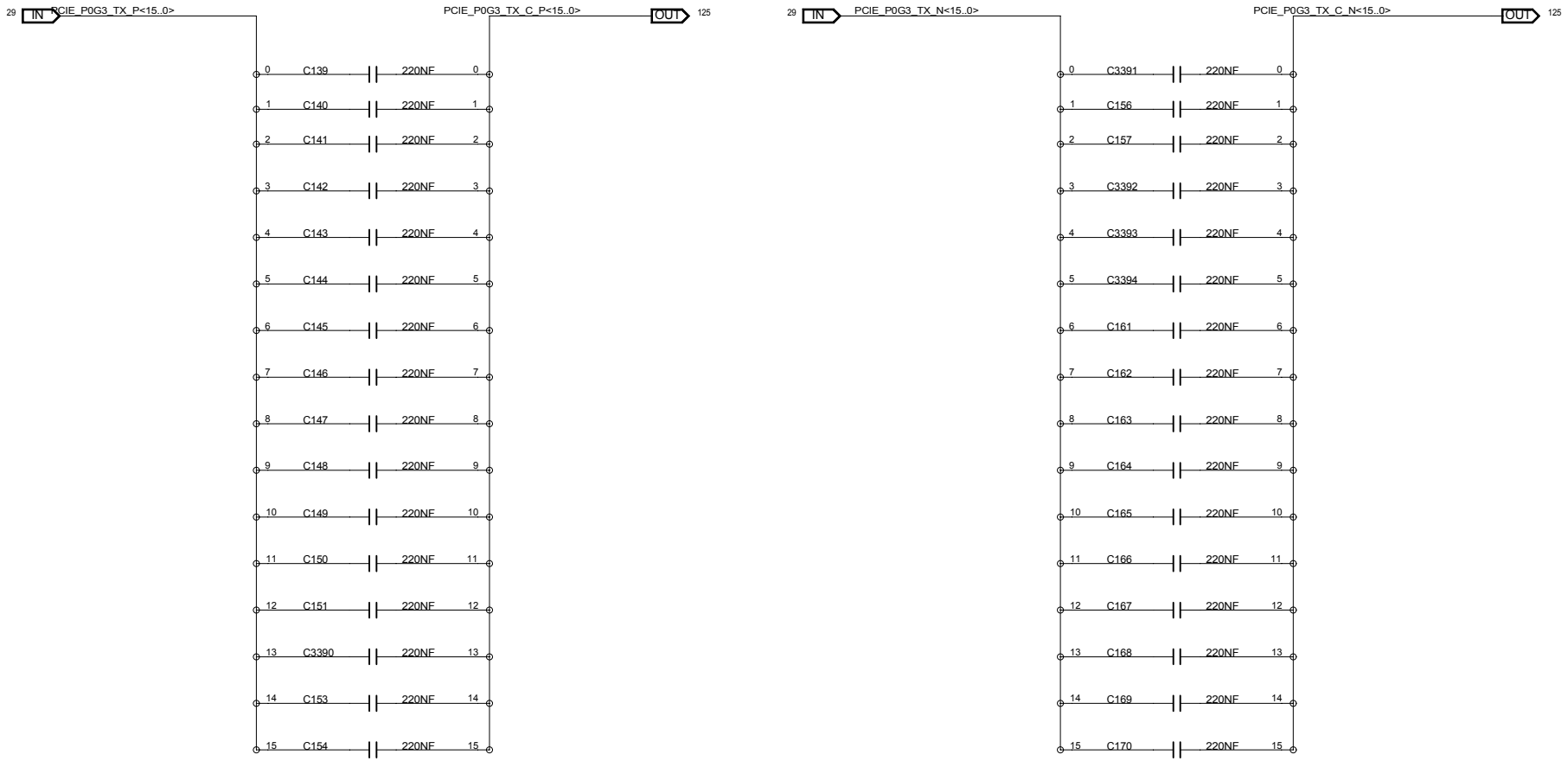

MODULE=---
FUNCTION=---

CNIT TECHNOLOGIES CO.,LTD.				
BOARD NAME MB-CADT24D_VERA			DRAWINGNO CNIT0302K1XKDL	
DESIGNED	yujianjiang00259	DATE <DATE_DN>	SHEET 136 OF 200	REV
REVIEWED	<REVIEWED>	DATE <DATE_RW>	Fri Aug 29 11:21:42 2025	

THIS DOCUMENT AND THE TECHNICAL DATA DISCLOSED ARE PROPRIETARY TO CNIT TECHNOLOGIES CO., LTD. AND SHALL NOT BE DUPLICATED USED RELEASED OR DISCLOSED WITHOUT EXPRESSING WRITTEN PERMISSION.

CPU0_P0

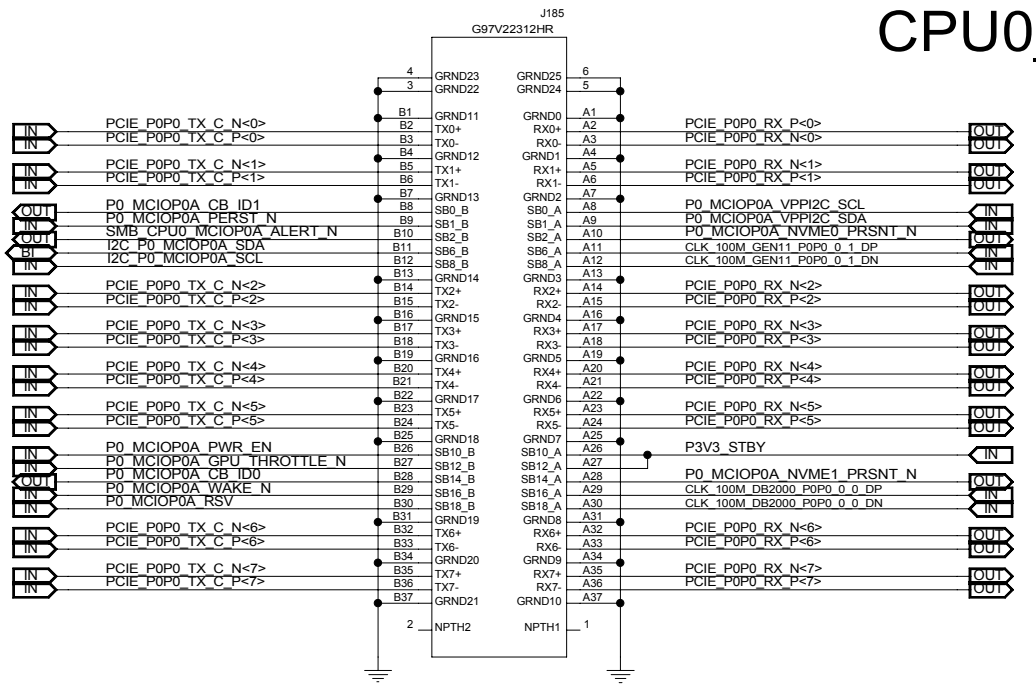

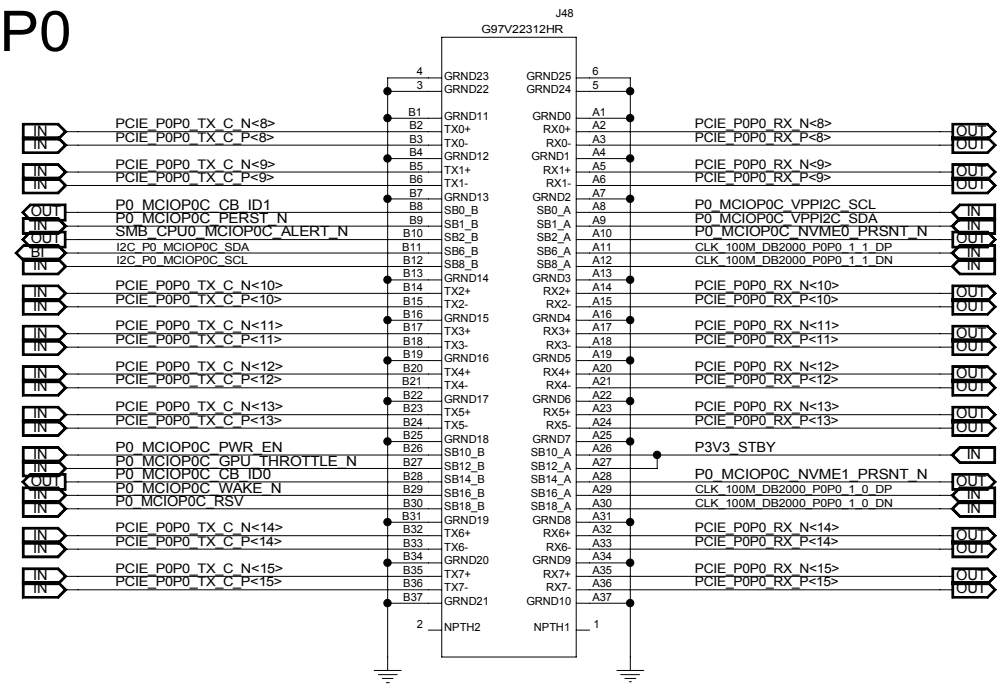

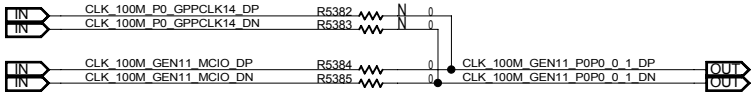

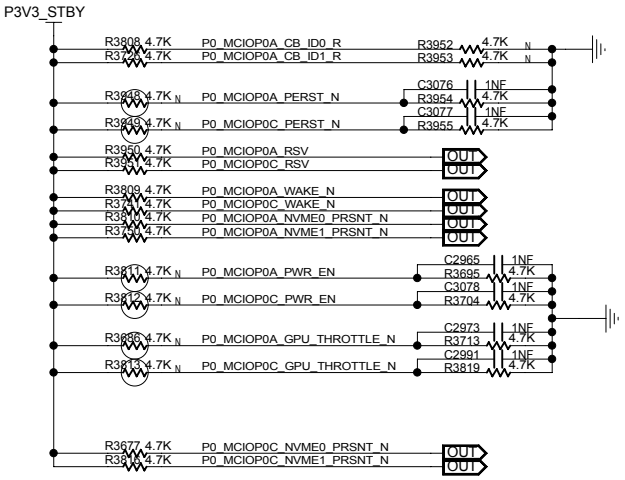

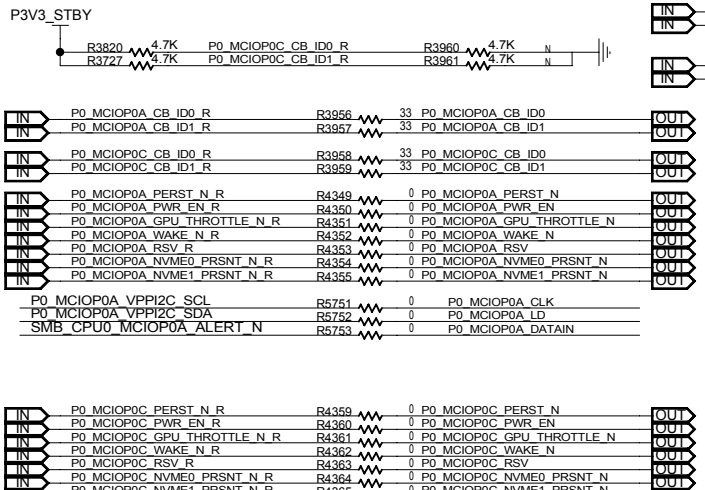

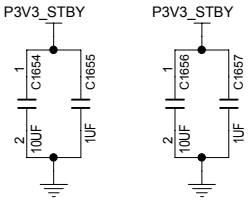

MODULE=---

FUNCTION=---

CNIT TECHNOLOGIES CO.,LTD.				
BOARD NAME MB-CADT24D_VERA			DRAWINGNO CNIT0302K1XKDL	
DESIGNED	yujianjiang00259	DATE <DATE_DN>	SHEET 137 OF 200	REV
REVIEWED	<REVIEWED>	DATE <DATE_RW>	Thu Sep 11 11:12:42 2025	

THIS DOCUMENT AND THE TECHNICAL DATA DISCLOSED ARE PROPRIETARY TO CNIT TECHNOLOGIES CO., LTD. AND SHALL NOT BE DUPLICATED USED RELEASED OR DISCLOSED WITHOUT EXPRESSING WRITTEN PERMISSION.

MCIO:P0P1

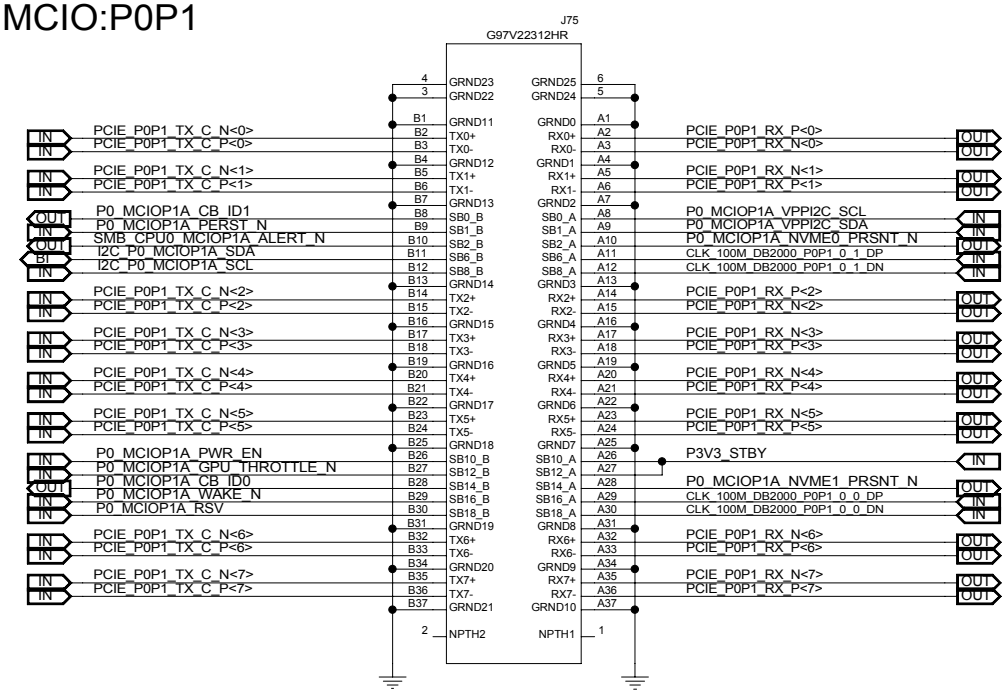

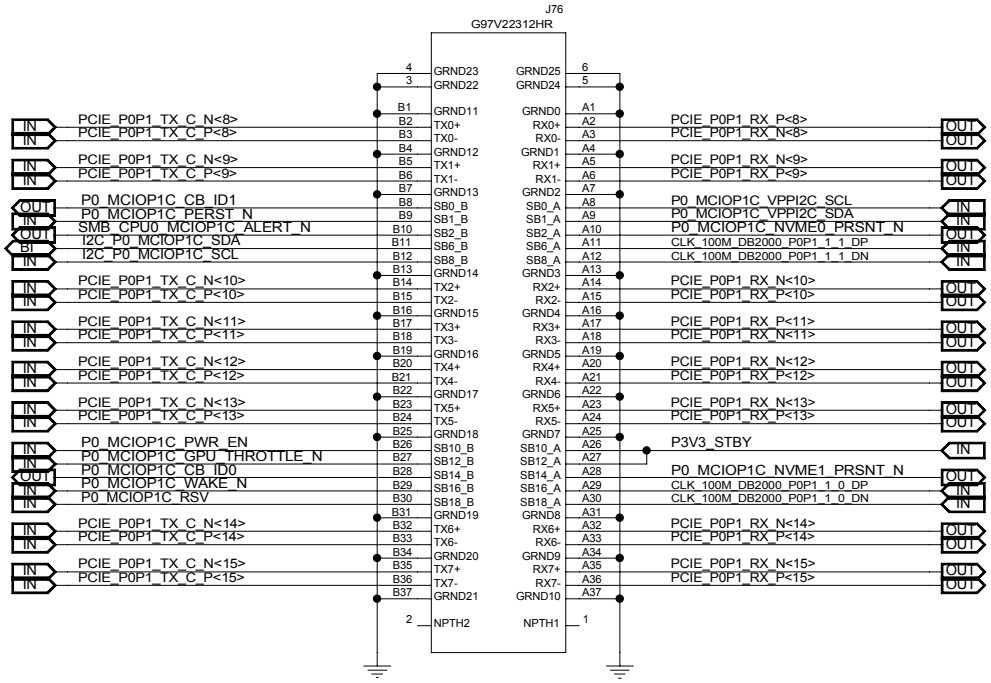

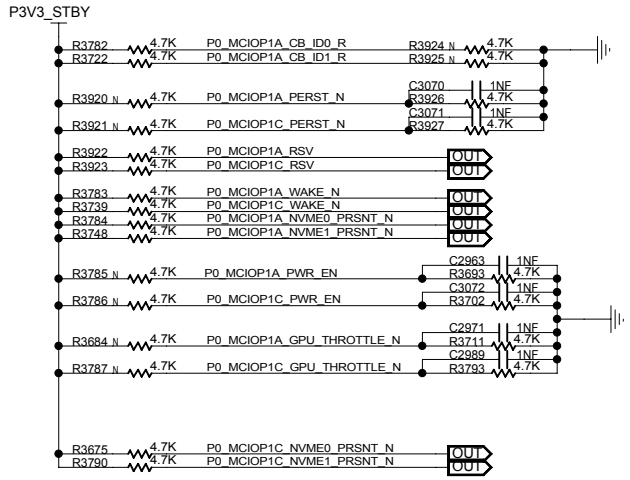

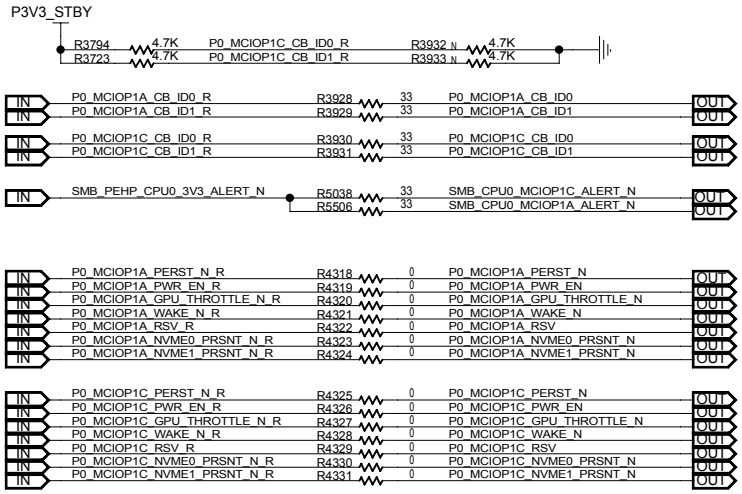

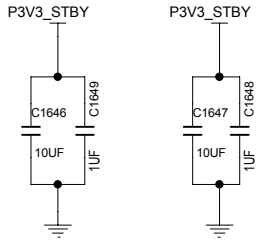

MODULE=---

FUNCTION=---

CNIT TECHNOLOGIES CO.,LTD.				
BOARD NAME MB-CADT24D_VERA			DRAWINGNO CNIT0302K1XKDL	
DESIGNED	yujianjiang00259	DATE <DATE_DN>	SHEET 138 OF 200	REV
REVIEWED	<REVIEWED>	DATE <DATE_RW>	Wed Sep 10 16:02:33 2025	

THIS DOCUMENT AND THE TECHNICAL DATA DISCLOSED ARE PROPRIETARY TO CNIT TECHNOLOGIES CO., LTD. AND SHALL NOT BE DUPLICATED USED RELEASED OR DISCLOSED WITHOUT EXPRESSING WRITTEN PERMISSION.

MCIO:P0P2

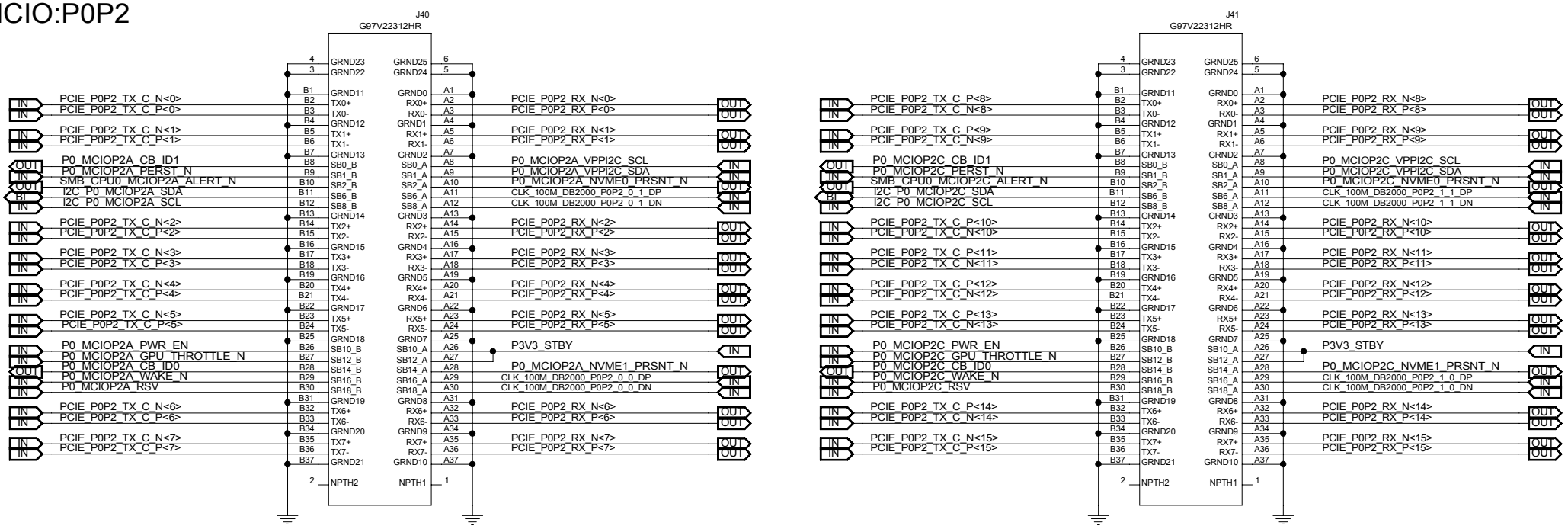

MODULE=---

FUNCTION=---

CNIT TECHNOLOGIES CO.,LTD.			
BOARD NAME MB-CADT24D_VERA		DRAWINGNO CNIT0302K1XKDL	
DESIGNED yujianjiang00259	DATE <DATE_DN>	SHEET 139 OF 200	REV
REVIEWED <REVIEWED>	DATE <DATE_RW>	Sat Sep 06 15:19:35 2025	

THIS DOCUMENT AND THE TECHNICAL DATA DISCLOSED ARE PROPRIETARY TO CNIT TECHNOLOGIES CO., LTD. AND SHALL NOT BE DUPLICATED USED RELEASED OR DISCLOSED WITHOUT EXPRESSING WRITTEN PERMISSION.

MCIO:P0P3

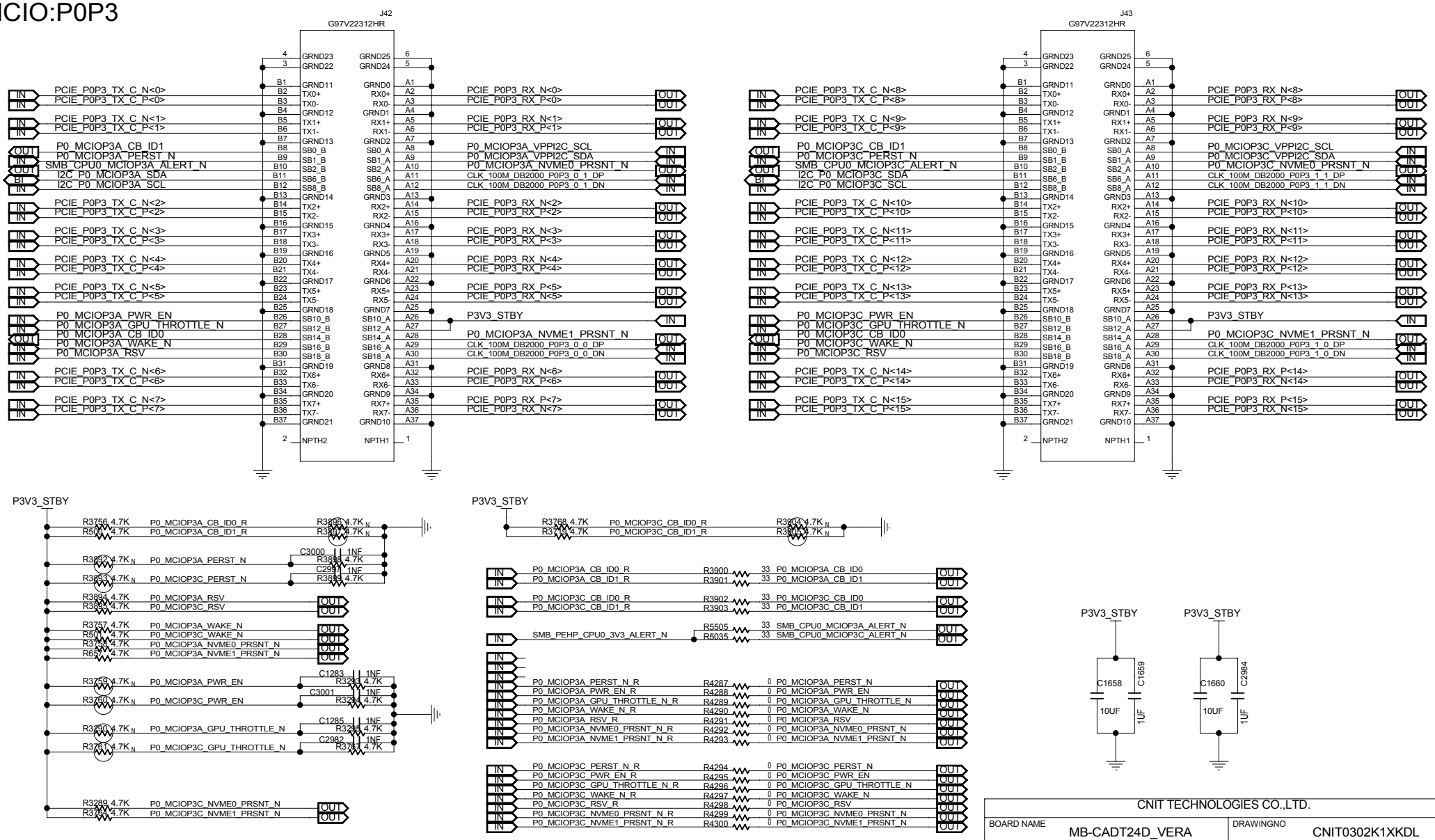

MODULE=---

FUNCTION=---

CNIT TECHNOLOGIES CO.,LTD.				
BOARD NAME MB-CADT24D_VERA			DRAWINGNO CNIT0302K1XKDL	
DESIGNED	yujianjiang00259	DATE <DATE_DN>	SHEET 140 OF 200	REV
REVIEWED	<REVIEWED>	DATE <DATE_RW>	Fri Sep 05 09:59:17 2025	

THIS DOCUMENT AND THE TECHNICAL DATA DISCLOSED ARE PROPRIETARY TO CNIT TECHNOLOGIES CO., LTD. AND SHALL NOT BE DUPLICATED USED RELEASED OR DISCLOSED WITHOUT EXPRESSING WRITTEN PERMISSION.

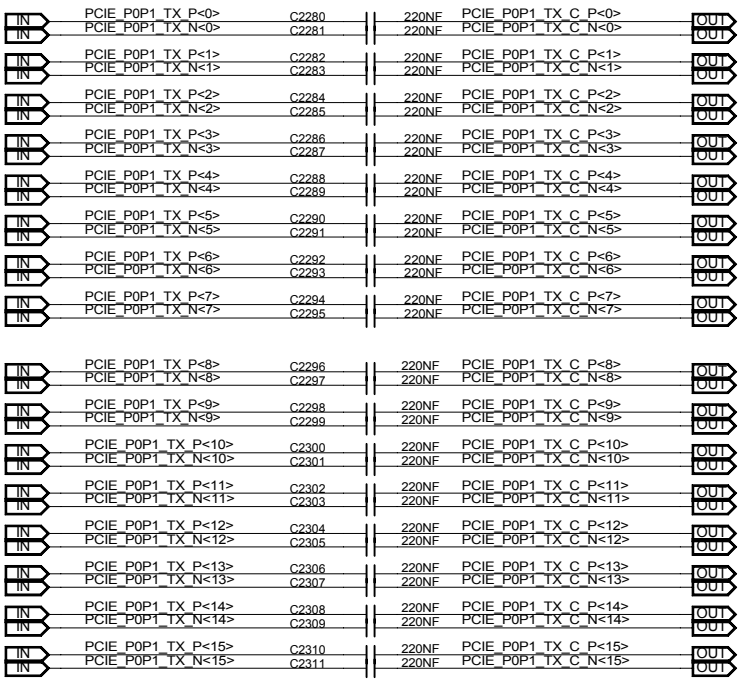

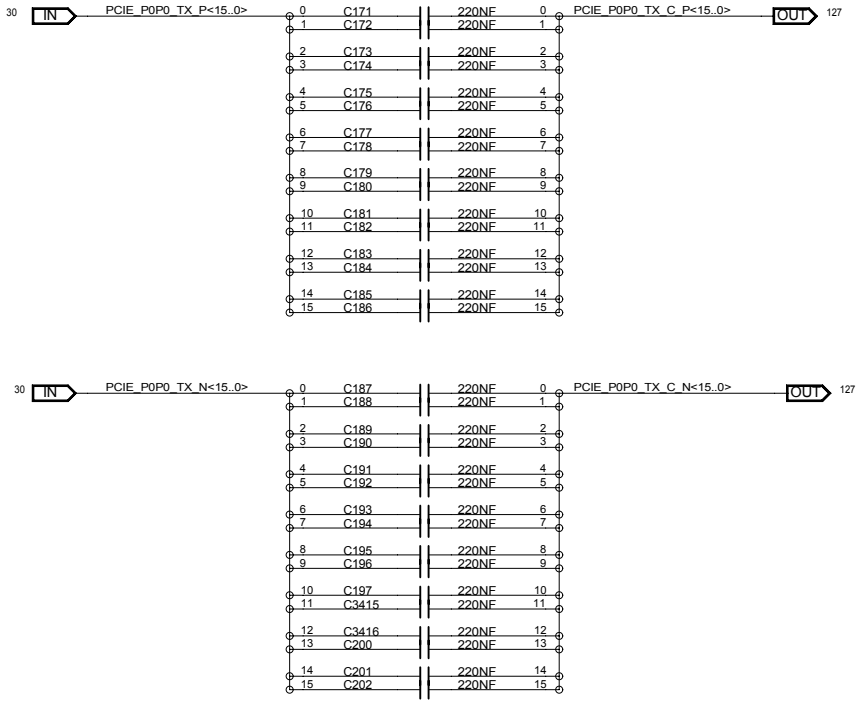

MODULE=---

FUNCTION=---

CNIT TECHNOLOGIES CO.,LTD.				
BOARD NAME MB-CADT24D_VERA			DRAWINGNO CNIT0302K1XKDL	
DESIGNED	yujianjiang00259	DATE <DATE_DN>	SHEET 141 OF 200	REV
REVIEWED	<REVIEWED>	DATE <DATE_RW>	Fri Aug 29 11:21:44 2025	

THIS DOCUMENT AND THE TECHNICAL DATA DISCLOSED ARE PROPRIETARY TO CNIT TECHNOLOGIES CO., LTD. AND SHALL NOT BE DUPLICATED USED RELEASED OR DISCLOSED WITHOUT EXPRESSING WRITTEN PERMISSION.

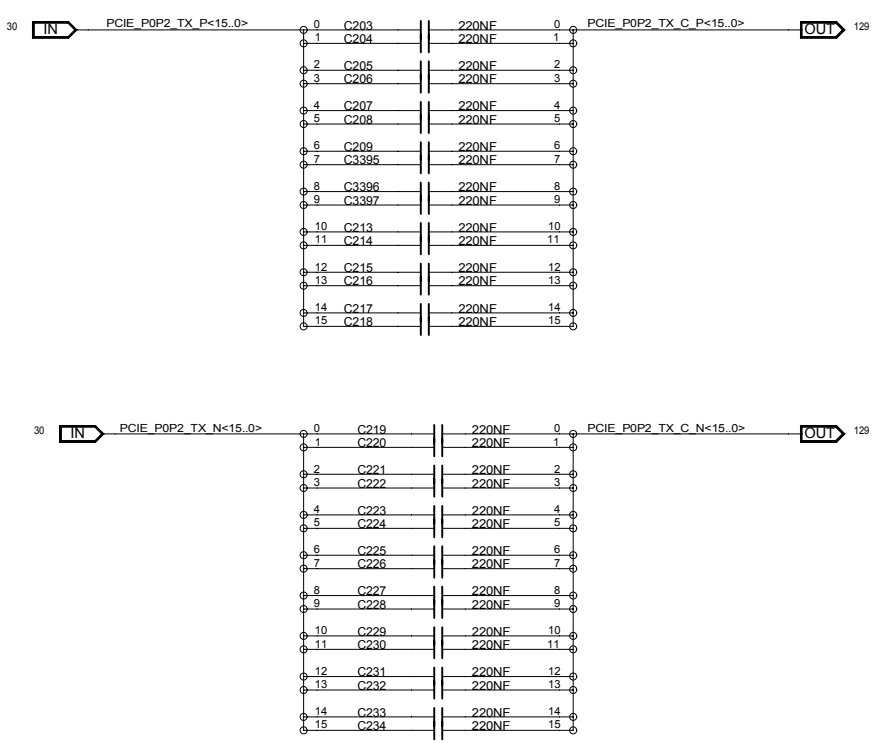

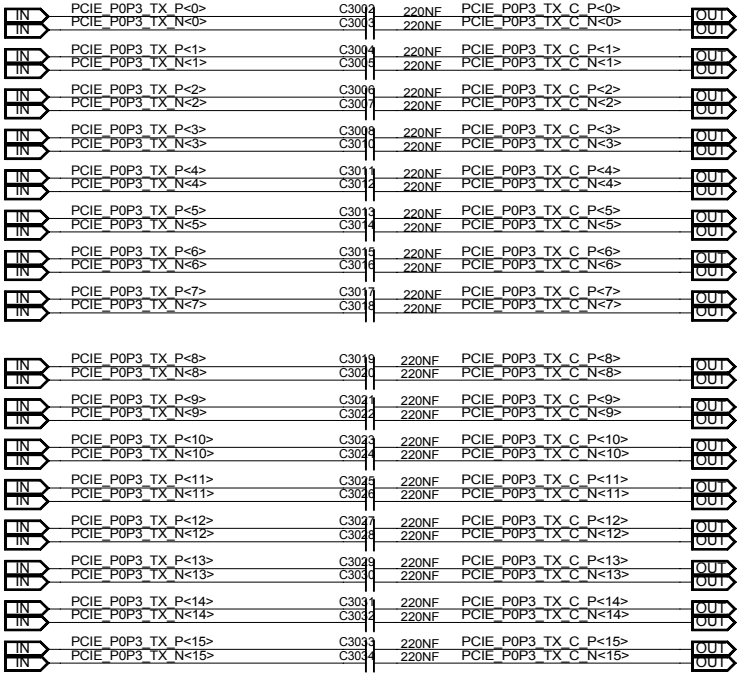

MODULE=---

FUNCTION=---

CNIT TECHNOLOGIES CO.,LTD.				
BOARD NAME MB-CADT24D_VERA			DRAWINGNO CNIT0302K1XKDL	
DESIGNED	yujianjiang00259	DATE <DATE_DN>	SHEET 142 OF 200	REV
REVIEWED	<REVIEWED>	DATE <DATE_RW>	Fri Aug 29 11:21:45 2025	

THIS DOCUMENT AND THE TECHNICAL DATA DISCLOSED ARE PROPRIETARY TO CNIT TECHNOLOGIES CO., LTD. AND SHALL NOT BE DUPLICATED USED RELEASED OR DISCLOSED WITHOUT EXPRESSING WRITTEN PERMISSION.

MCIO:P1G1

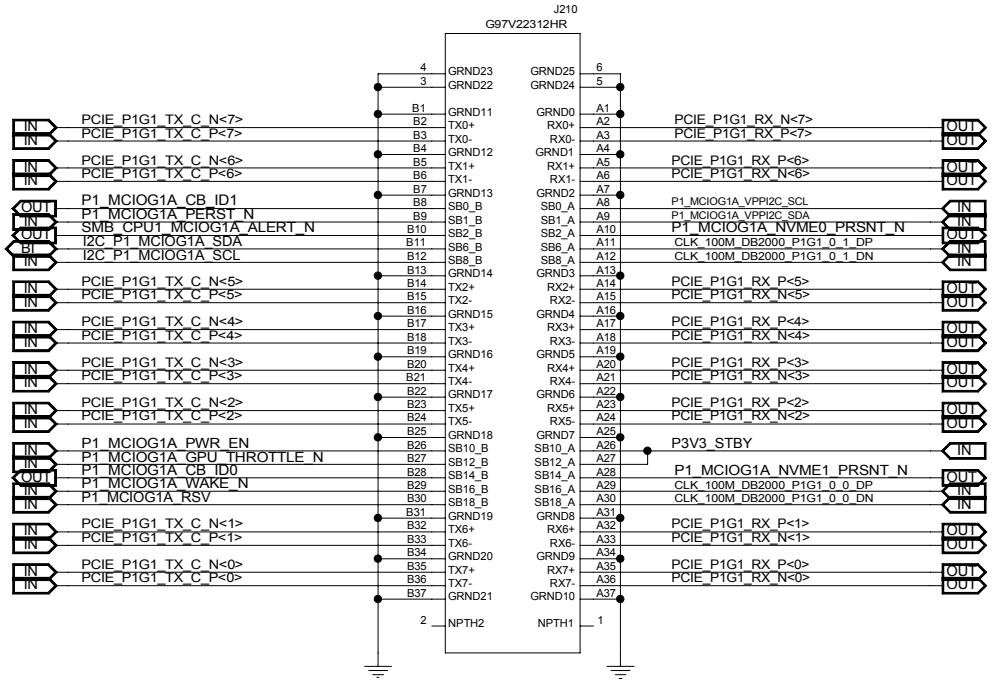

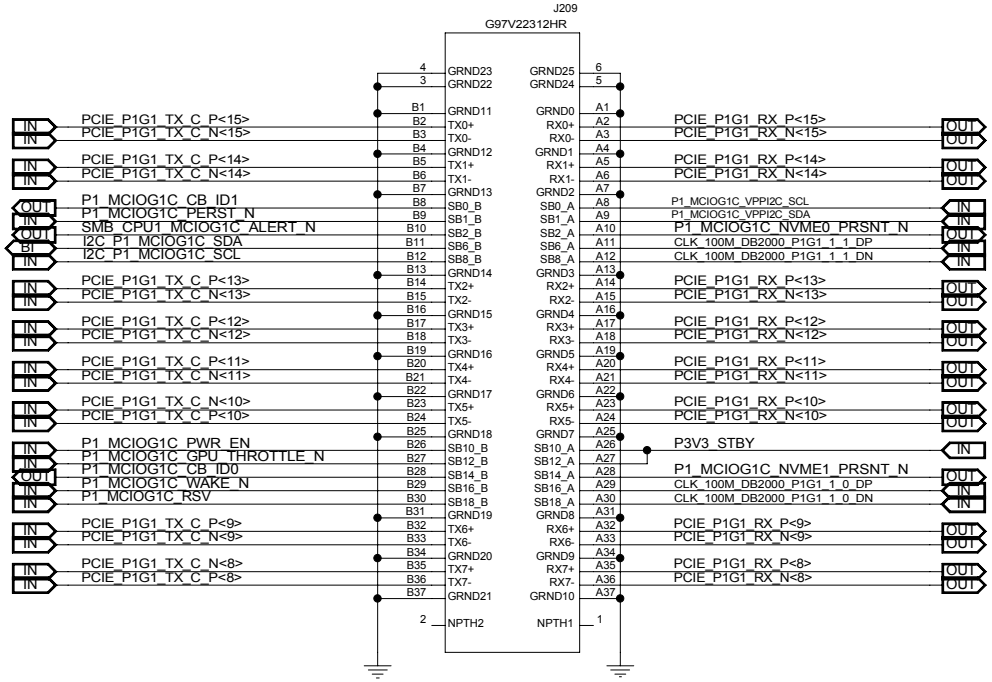

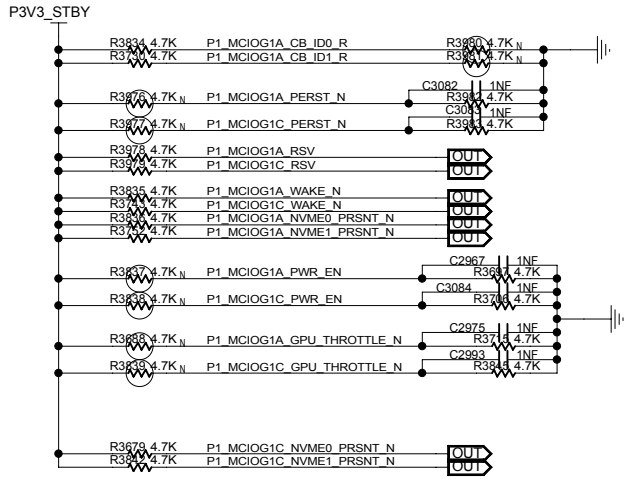

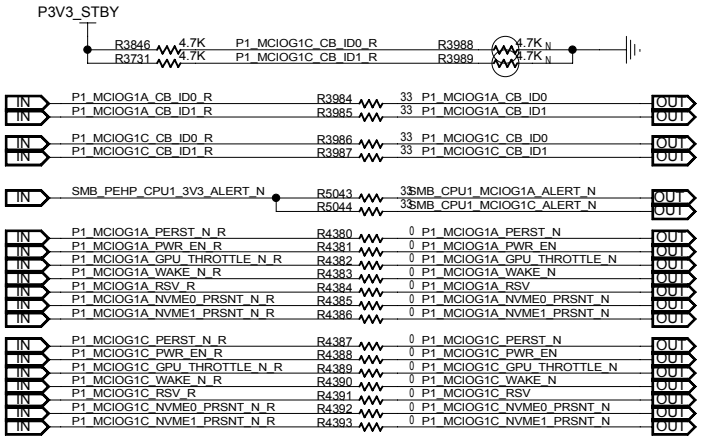

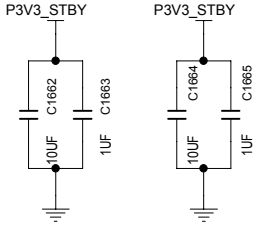

MODULE=---

FUNCTION=---

CNIT TECHNOLOGIES CO.,LTD.				
BOARD NAME MB-CADT24D_VERA			DRAWINGNO CNIT0302K1XKDL	
DESIGNED	yujianjiang00259	DATE <DATE_DN>	SHEET 143 OF 200	REV
REVIEWED	<REVIEWED>	DATE <DATE_RW>	Wed Sep 10 16:02:35 2025	

THIS DOCUMENT AND THE TECHNICAL DATA DISCLOSED ARE PROPRIETARY TO CNIT TECHNOLOGIES CO., LTD. AND SHALL NOT BE DUPLICATED USED RELEASED OR DISCLOSED WITHOUT EXPRESSING WRITTEN PERMISSION.

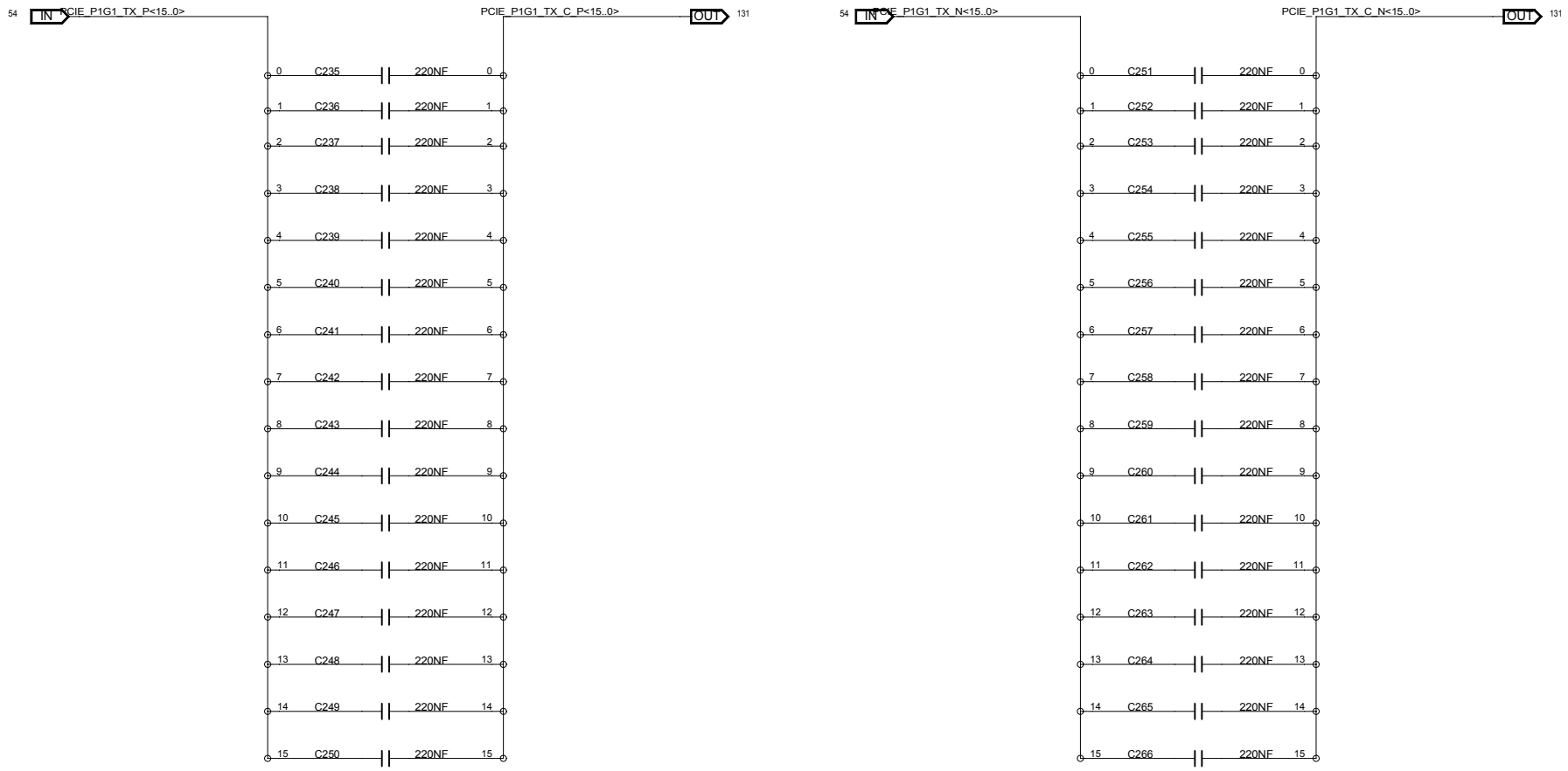

MODULE=---
FUNCTION=---

CNIT TECHNOLOGIES CO.,LTD.				
BOARD NAME MB-CADT24D_VERA			DRAWINGNO CNIT0302K1XKDL	
DESIGNED	yujianjiang00259	DATE <DATE_DN>	SHEET 144 OF 200	REV
REVIEWED	<REVIEWED>	DATE <DATE_RW>	Fri Aug 29 11:21:46 2025	

THIS DOCUMENT AND THE TECHNICAL DATA DISCLOSED ARE PROPRIETARY TO CNIT TECHNOLOGIES CO., LTD. AND SHALL NOT BE DUPLICATED USED RELEASED OR DISCLOSED WITHOUT EXPRESSING WRITTEN PERMISSION.

MCIO:P1P0

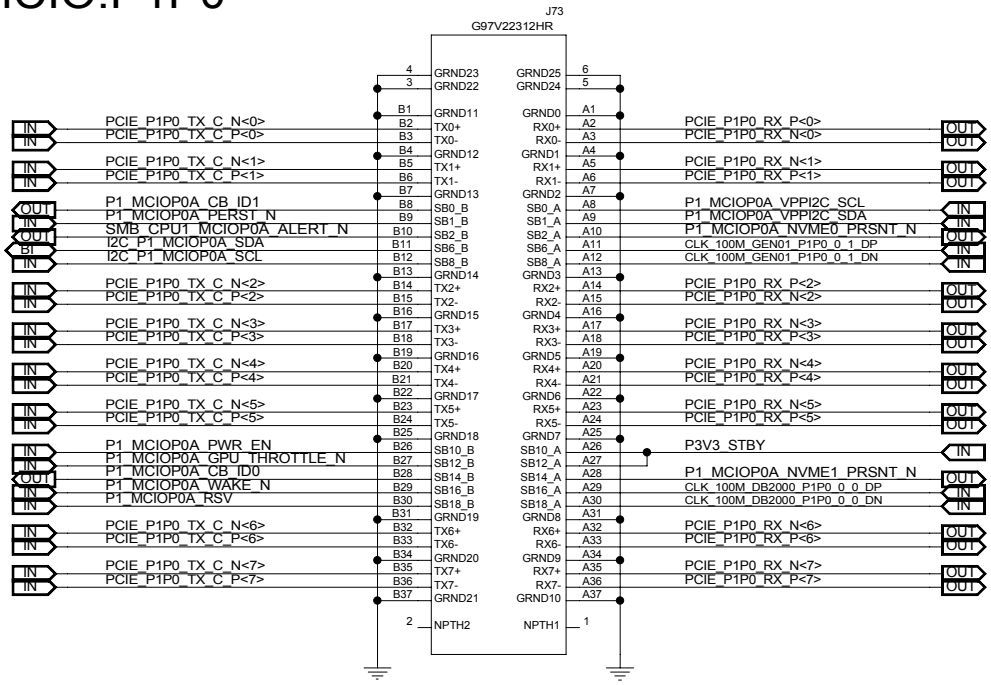

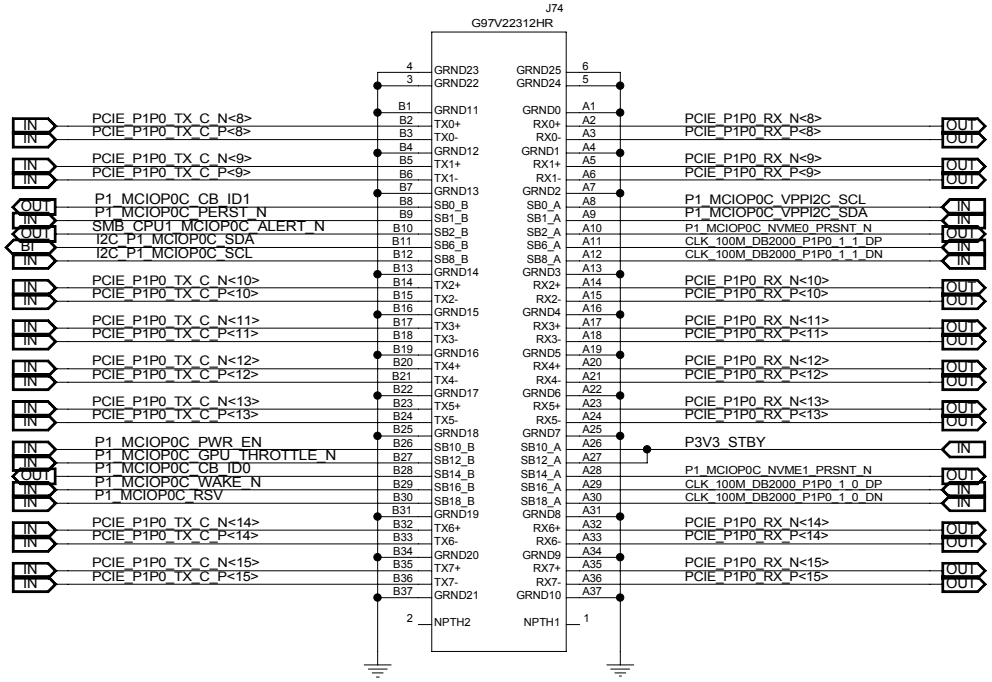

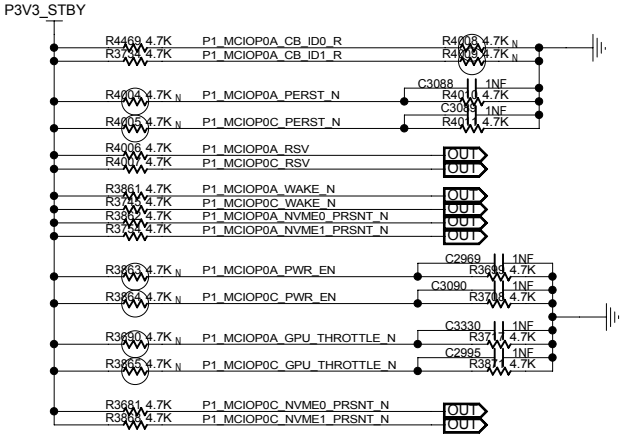

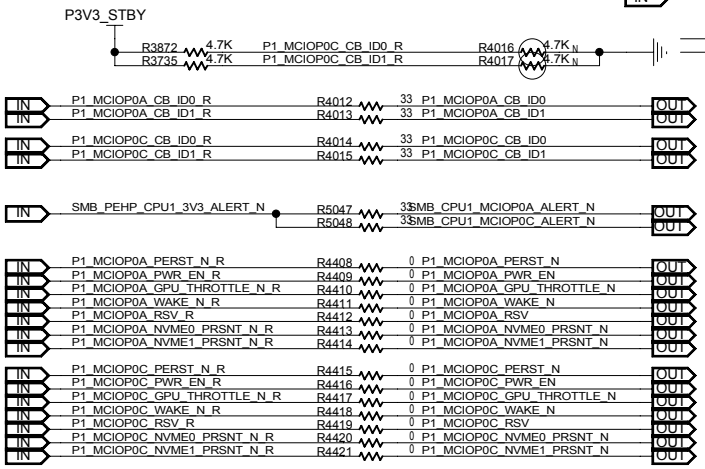

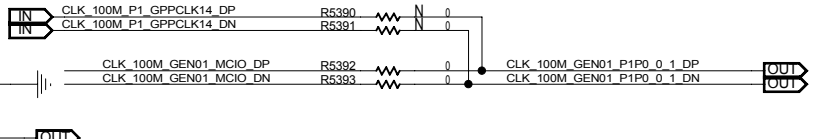

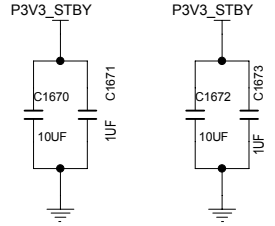

MODULE=---

FUNCTION=---

CNIT TECHNOLOGIES CO.,LTD.				
BOARD NAME MB-CADT24D_VERA			DRAWINGNO CNIT0302K1XKDL	
DESIGNED	yujianjiang00259	DATE <DATE_DN>	SHEET 145 OF 200	REV
REVIEWED	<REVIEWED>	DATE <DATE_RW>	Thu Sep 11 11:03:47 2025	

THIS DOCUMENT AND THE TECHNICAL DATA DISCLOSED ARE PROPRIETARY TO CNIT TECHNOLOGIES CO., LTD. AND SHALL NOT BE DUPLICATED USED RELEASED OR DISCLOSED WITHOUT EXPRESSING WRITTEN PERMISSION.

MCIO:P1P1

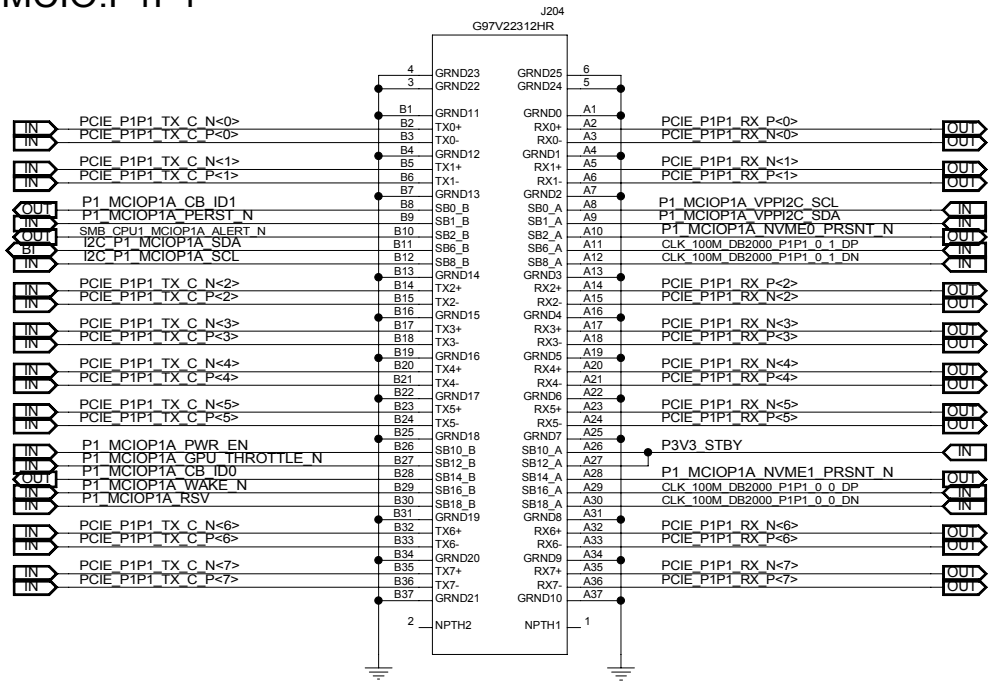

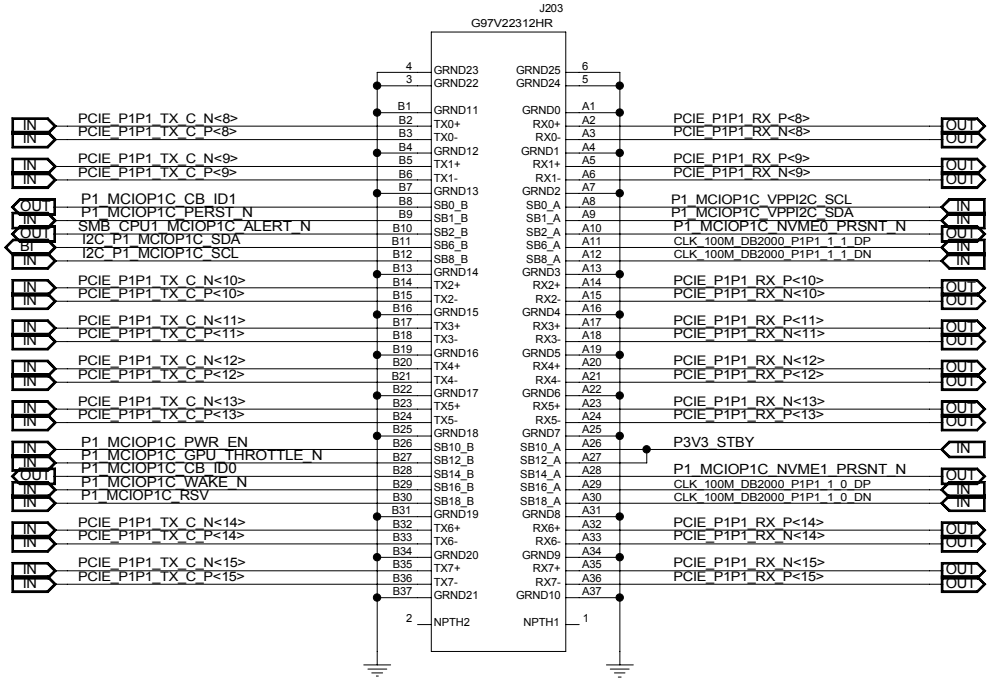

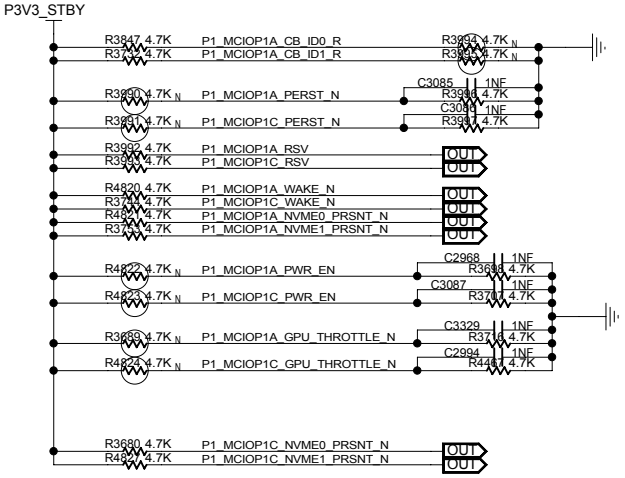

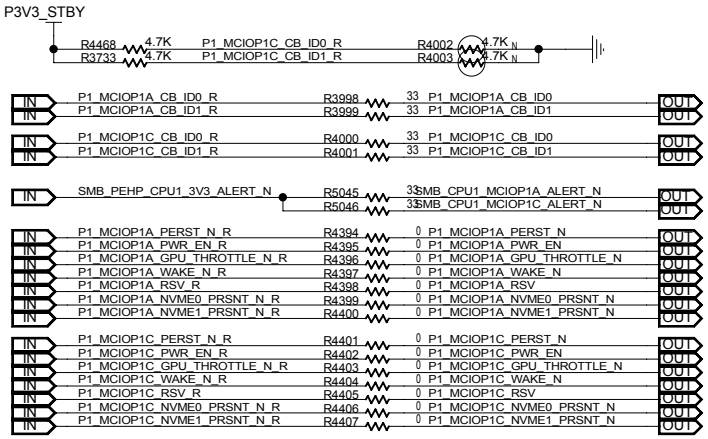

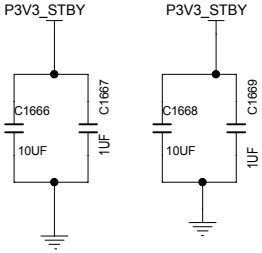

MODULE=---

FUNCTION=---

CNIT TECHNOLOGIES CO.,LTD.				
BOARD NAME MB-CADT24D_VERA			DRAWINGNO CNIT0302K1XKDL	
DESIGNED	yujianjiang00259	DATE <DATE_DN>	SHEET 146 OF 200	REV
REVIEWED	<REVIEWED>	DATE <DATE_RW>	Wed Sep 10 16:02:39 2025	

THIS DOCUMENT AND THE TECHNICAL DATA DISCLOSED ARE PROPRIETARY TO CNIT TECHNOLOGIES CO., LTD. AND SHALL NOT BE DUPLICATED USED RELEASED OR DISCLOSED WITHOUT EXPRESSING WRITTEN PERMISSION.

MCIO:P1P2

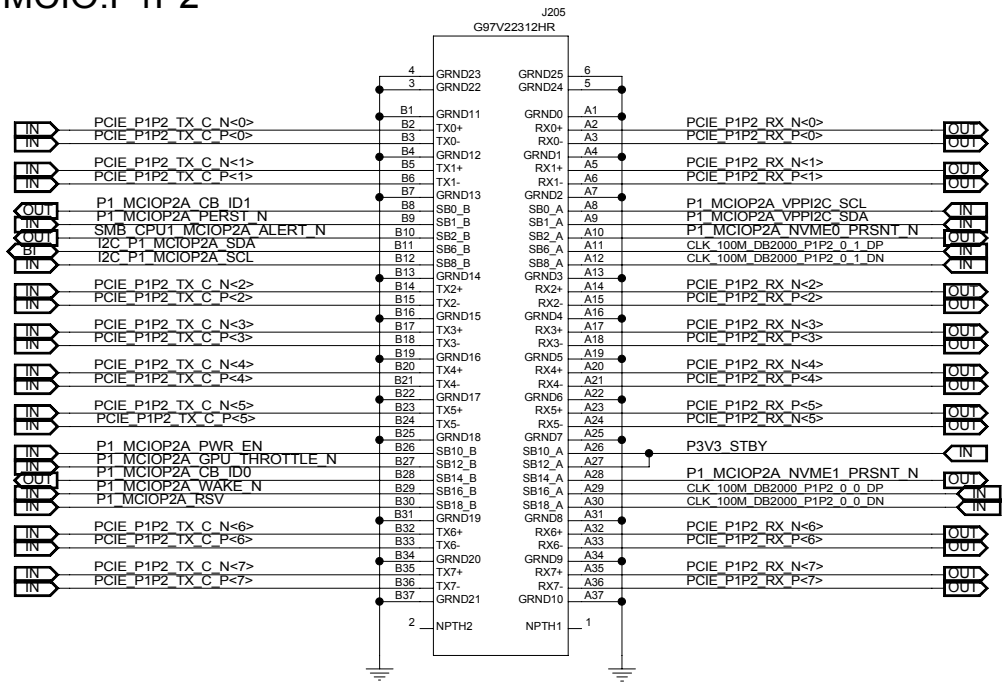

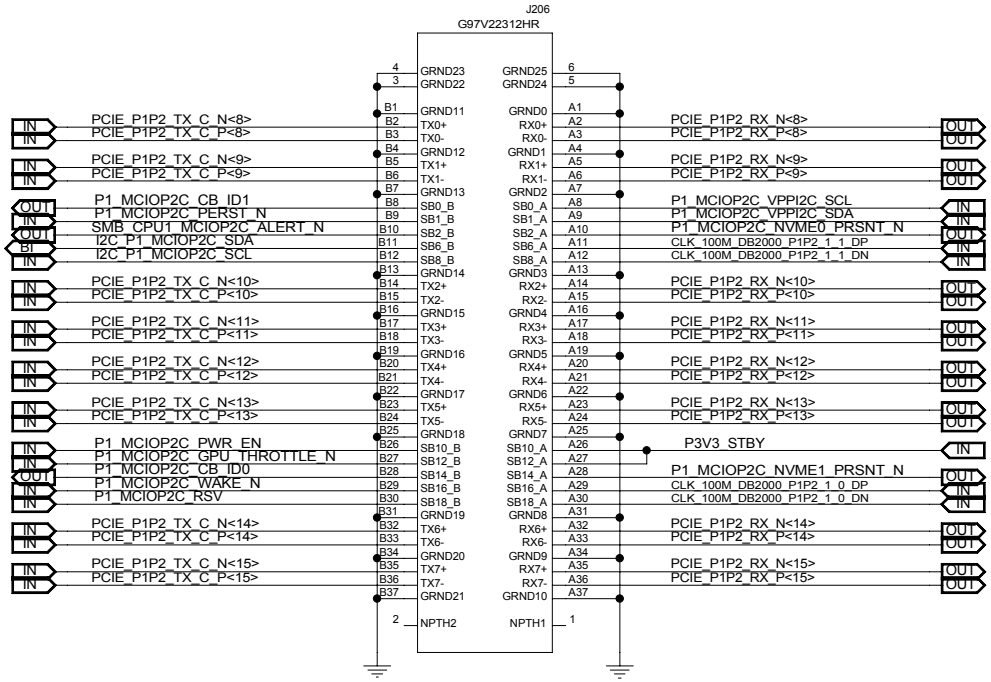

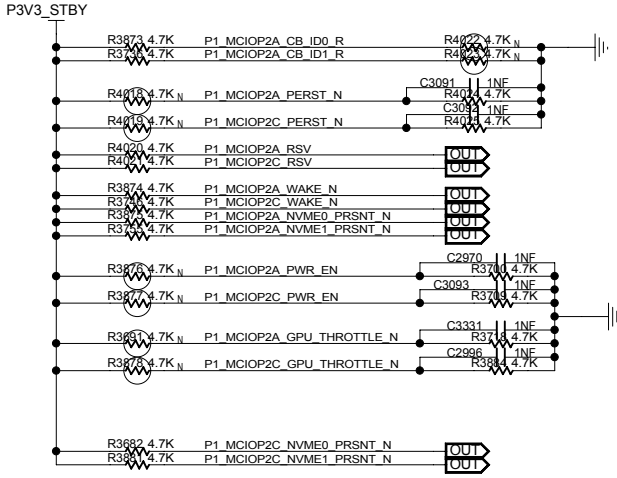

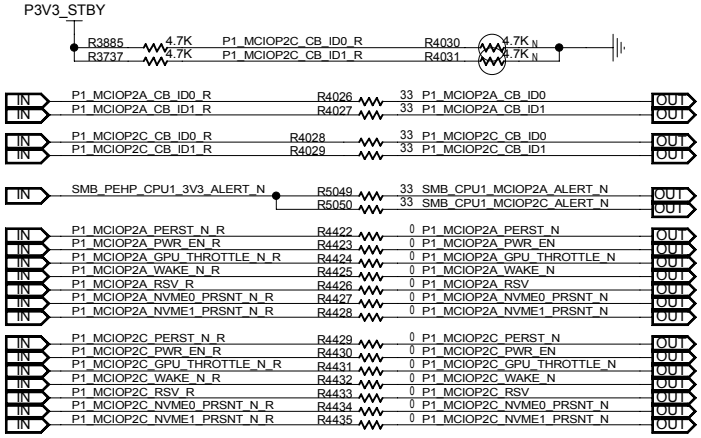

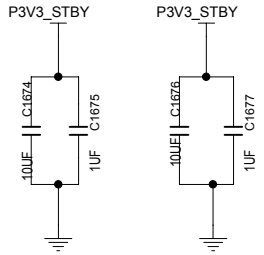

MODULE=---

FUNCTION=---

CNIT TECHNOLOGIES CO.,LTD.				
BOARD NAME MB-CADT24D_VERA			DRAWINGNO CNIT0302K1XKDL	
DESIGNED	yujianjiang00259	DATE <DATE_DN>	SHEET 147 OF 200	REV
REVIEWED	<REVIEWED>	DATE <DATE_RW>	Thu Sep 11 11:21:04 2025	

THIS DOCUMENT AND THE TECHNICAL DATA DISCLOSED ARE PROPRIETARY TO CNIT TECHNOLOGIES CO., LTD. AND SHALL NOT BE DUPLICATED USED RELEASED OR DISCLOSED WITHOUT EXPRESSING WRITTEN PERMISSION.

MCIO:P0P3

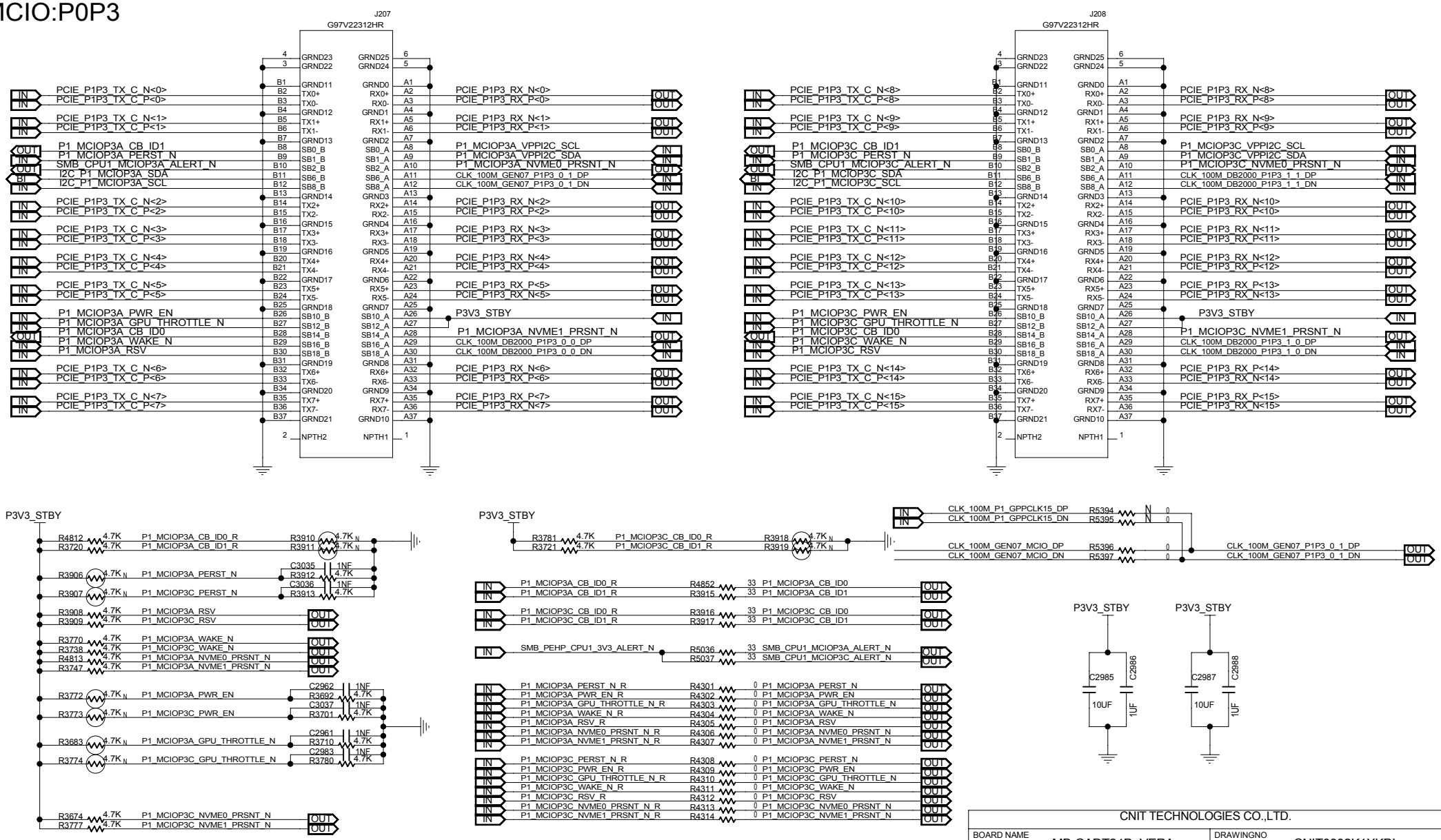

MODULE=---

FUNCTION=---

CNIT TECHNOLOGIES CO.,LTD.				
BOARD NAME MB-CADT24D_VERA			DRAWINGNO CNIT0302K1XKDL	
DESIGNED	yujianjiang00259	DATE <DATE_DN>	SHEET 148 OF 200	REV
REVIEWED	<REVIEWED>	DATE <DATE_RW>	Thu Sep 11 11:21:07 2025	

THIS DOCUMENT AND THE TECHNICAL DATA DISCLOSED ARE PROPRIETARY TO CNIT TECHNOLOGIES CO., LTD. AND SHALL NOT BE DUPLICATED USED RELEASED OR DISCLOSED WITHOUT EXPRESSING WRITTEN PERMISSION.

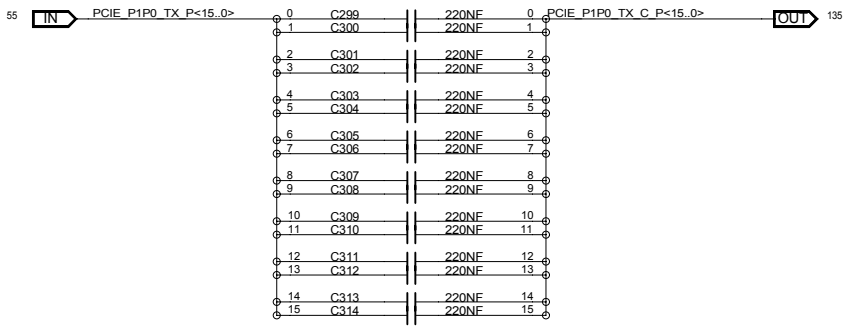

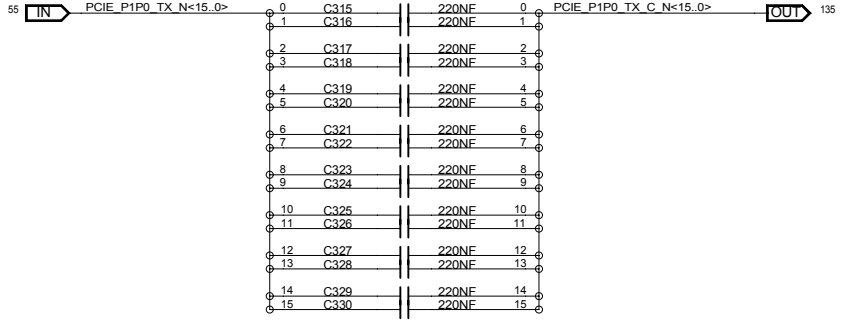

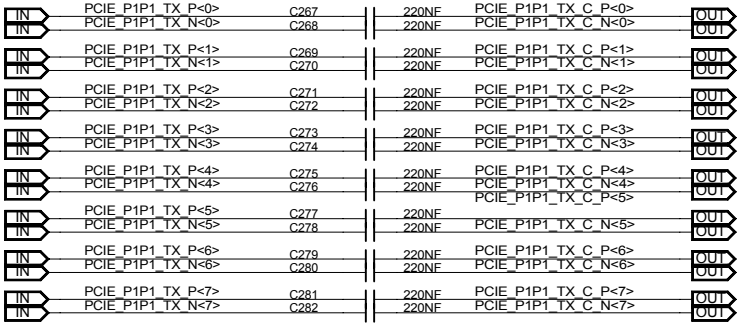

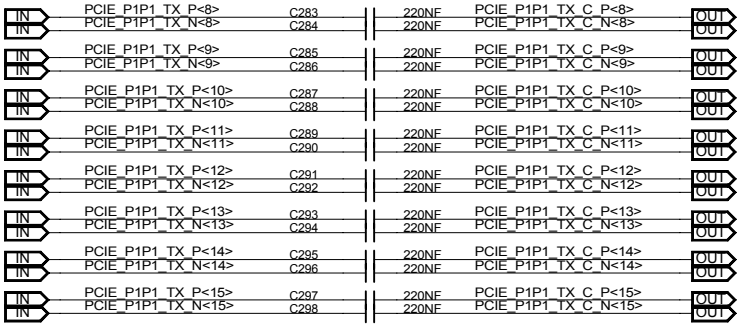

MODULE=---

FUNCTION=---

CNIT TECHNOLOGIES CO.,LTD.				
BOARD NAME MB-CADT24D_VERA			DRAWINGNO CNIT0302K1XKDL	
DESIGNED	yujianjiang00259	DATE <DATE_DN>	SHEET 149 OF 200	REV
REVIEWED	<REVIEWED>	DATE <DATE_RW>	Fri Aug 29 11:21:49 2025	

THIS DOCUMENT AND THE TECHNICAL DATA DISCLOSED ARE PROPRIETARY TO CNIT TECHNOLOGIES CO., LTD. AND SHALL NOT BE DUPLICATED USED RELEASED OR DISCLOSED WITHOUT EXPRESSING WRITTEN PERMISSION.

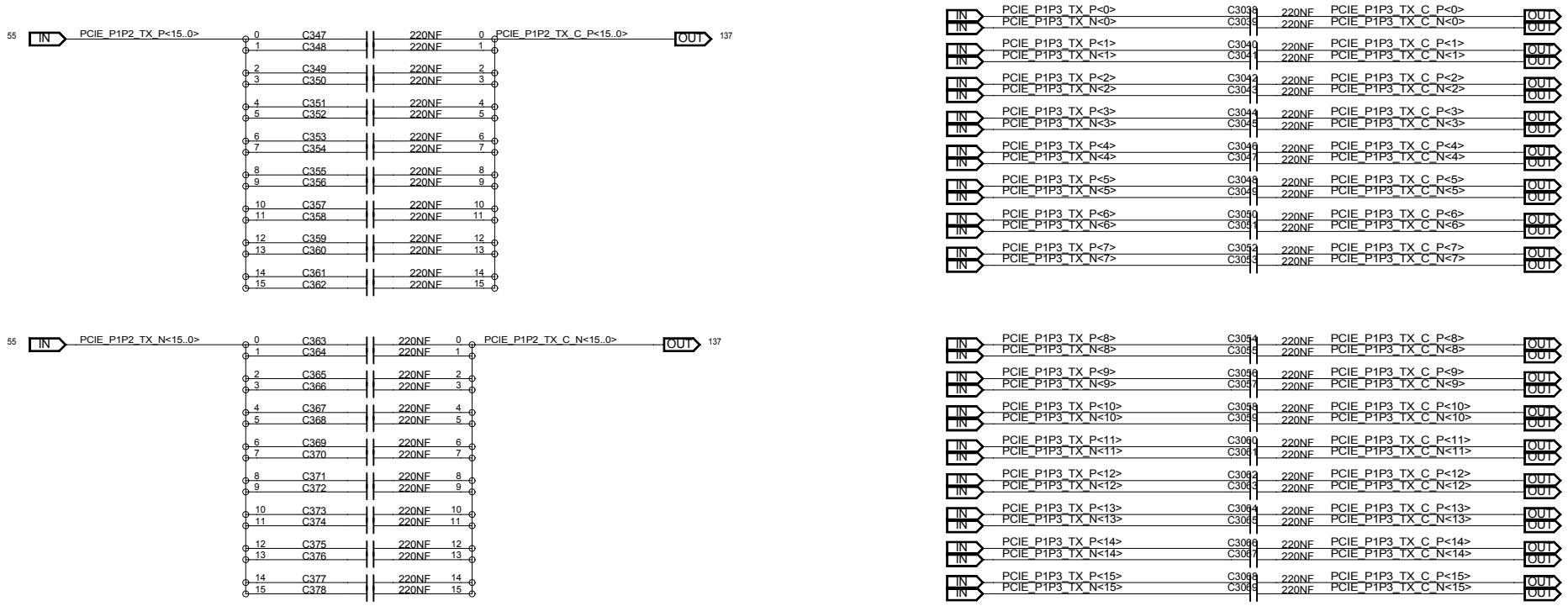

MODULE=---

FUNCTION=---

CNIT TECHNOLOGIES CO.,LTD.				
BOARD NAME MB-CADT24D_VERA			DRAWINGNO CNIT0302K1XKDL	
DESIGNED	yujianjiang00259	DATE <DATE_DN>	SHEET 150 OF 200	REV
REVIEWED	<REVIEWED>	DATE <DATE_RW>	Fri Aug 29 11:21:49 2025	

THIS DOCUMENT AND THE TECHNICAL DATA DISCLOSED ARE PROPRIETARY TO CNIT TECHNOLOGIES CO., LTD. AND SHALL NOT BE DUPLICATED USED RELEASED OR DISCLOSED WITHOUT EXPRESSING WRITTEN PERMISSION.

MCIO WAKE/RST

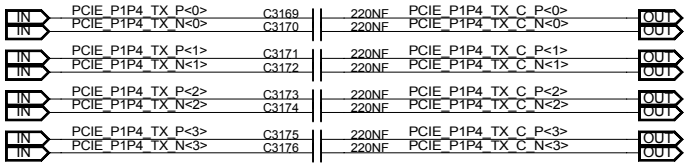

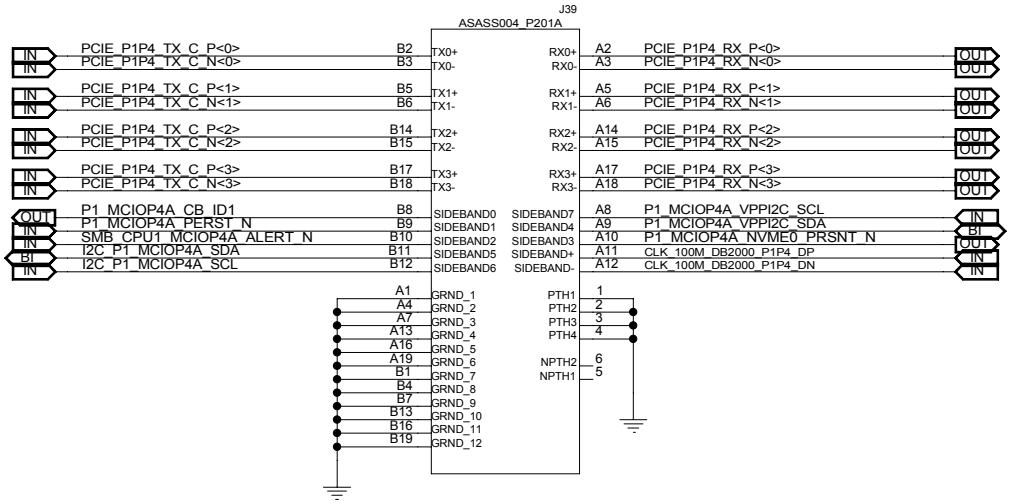

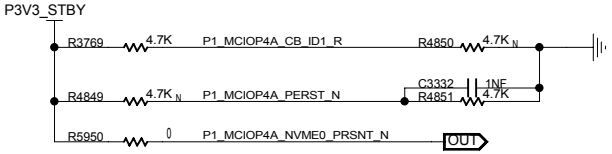

MODULE=---

FUNCTION=---

CNIT TECHNOLOGIES CO.,LTD.				
BOARD NAME MB-CADT24D_VERA			DRAWINGNO CNIT0302K1XKDL	
DESIGNED	yujianjiang00259	DATE <DATE_DN>	SHEET 151 OF 200	REV
REVIEWED	<REVIEWED>	DATE <DATE_RW>	Sat Sep 13 15:56:26 2025	

THIS DOCUMENT AND THE TECHNICAL DATA DISCLOSED ARE PROPRIETARY TO CNIT TECHNOLOGIES CO., LTD. AND SHALL NOT BE DUPLICATED USED RELEASED OR DISCLOSED WITHOUT EXPRESSING WRITTEN PERMISSION.

BAT

BATTERY VDD RTC

A1-A2:NORMAL

A2-A3:CMOS CLEAR

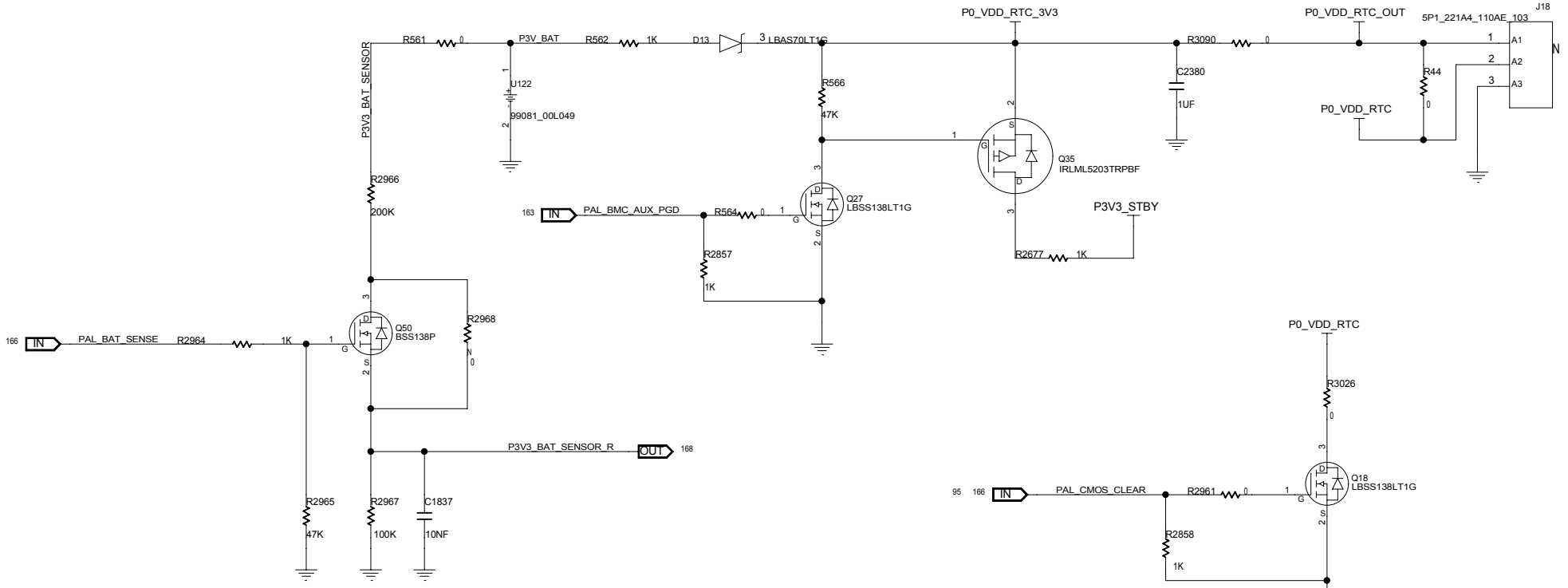

BAT VOLTAGE SENSOR

BMC & CPLD CLEAR CMOS

CNIT TECHNOLOGIES CO.,LTD.				
BOARD NAME MB-CADT24D_VERA			DRAWINGNO CNIT0302K1XKDL	
DESIGNED	yujianjiang00259	DATE <DATE_DN>	SHEET 152 OF 200	REV
REVIEWED	<REVIEWED>	DATE <DATE_RW>	Mon Sep 01 14:14:25 2025	

THIS DOCUMENT AND THE TECHNICAL DATA DISCLOSED ARE PROPRIETARY TO CNIT TECHNOLOGIES CO., LTD. AND SHALL NOT BE DUPLICATED USED RELEASED OR DISCLOSED WITHOUT EXPRESSING WRITTEN PERMISSION.

MODULE=---

FUNCTION=---

BMC RTC CLK

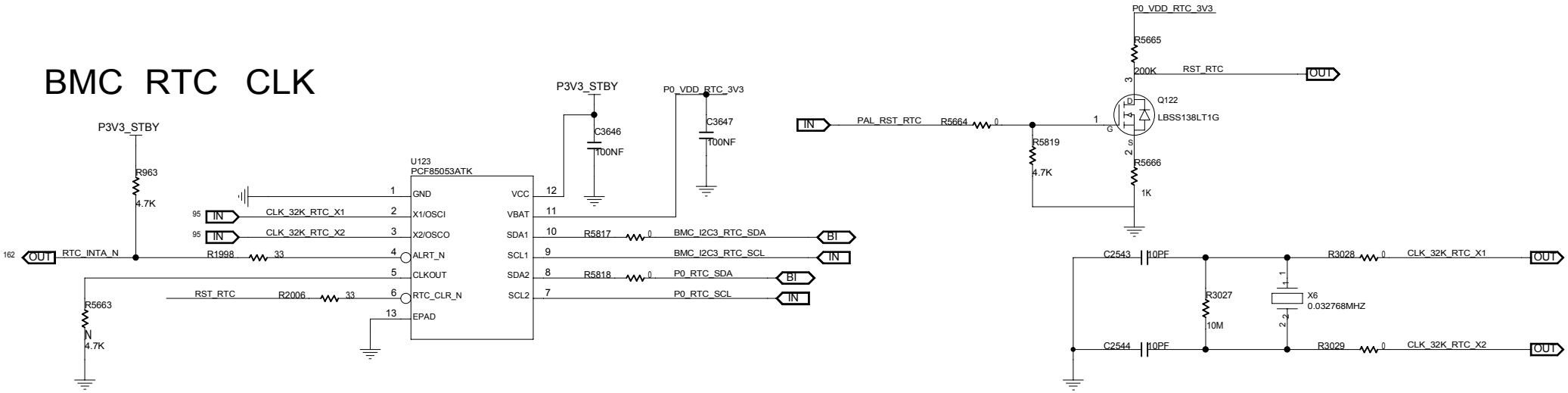

ADRESS 1101 0000
ADRESS 0XD0

MODULE=---
FUNCTION=---

CNIT TECHNOLOGIES CO.,LTD.				
BOARD NAME MB-CADT24D_VERA			DRAWINGNO CNIT0302K1XKDL	
DESIGNED	yujianjiang00259	DATE <DATE_DN>	SHEET 153 OF 200	REV
REVIEWED	<REVIEWED>	DATE <DATE_RW>	Sat Sep 13 15:56:29 2025	

THIS DOCUMENT AND THE TECHNICAL DATA DISCLOSED ARE PROPRIETARY TO CNIT TECHNOLOGIES CO., LTD. AND SHALL NOT BE DUPLICATED USED RELEASED OR DISCLOSED WITHOUT EXPRESSING WRITTEN PERMISSION.

P0 DIMM I3C

S	OE#	Function
L	L	D=1D
H	L	D=2D
X	H	Disconnect

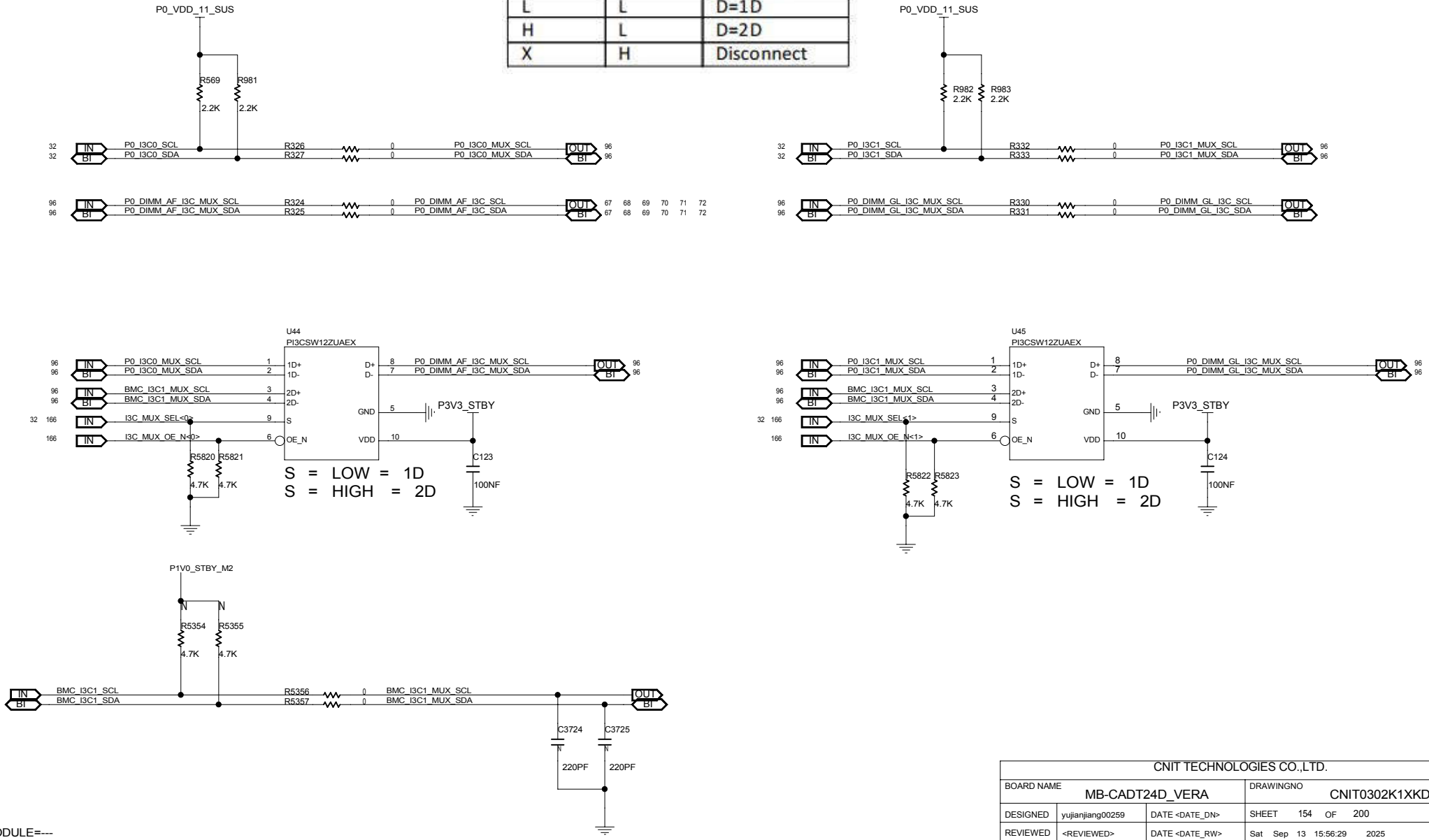

MODULE=---

FUNCTION=---

CNIT TECHNOLOGIES CO.,LTD.				
BOARD NAME MB-CADT24D_VERA			DRAWINGNO CNIT0302K1XKDL	
DESIGNED	yujianjiang00259	DATE <DATE_DN>	SHEET 154 OF 200	REV
REVIEWED	<REVIEWED>	DATE <DATE_RW>	Sat Sep 13 15:56:29 2025	

THIS DOCUMENT AND THE TECHNICAL DATA DISCLOSED ARE PROPRIETARY TO CNIT TECHNOLOGIES CO., LTD. AND SHALL NOT BE DUPLICATED USED RELEASED OR DISCLOSED WITHOUT EXPRESSING WRITTEN PERMISSION.

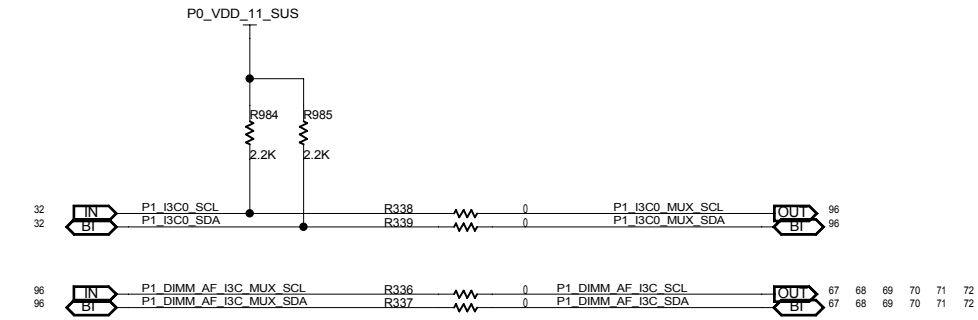

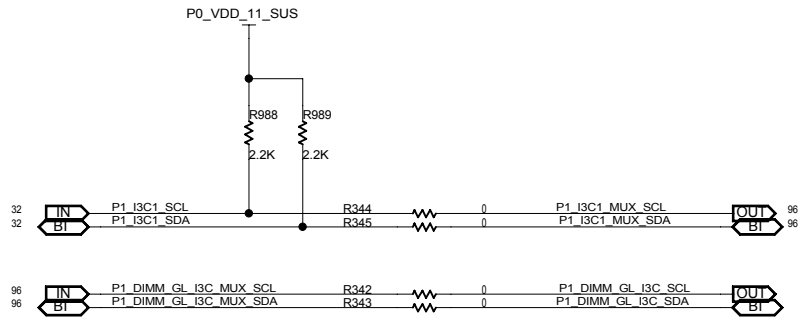

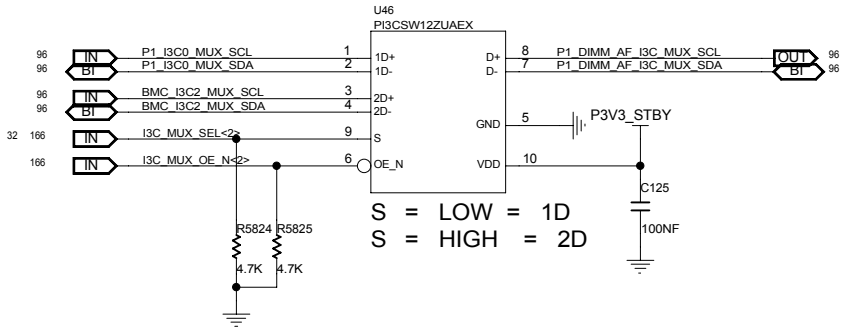

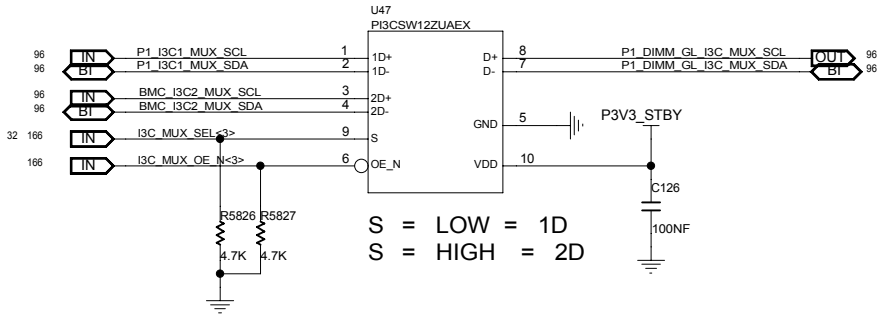

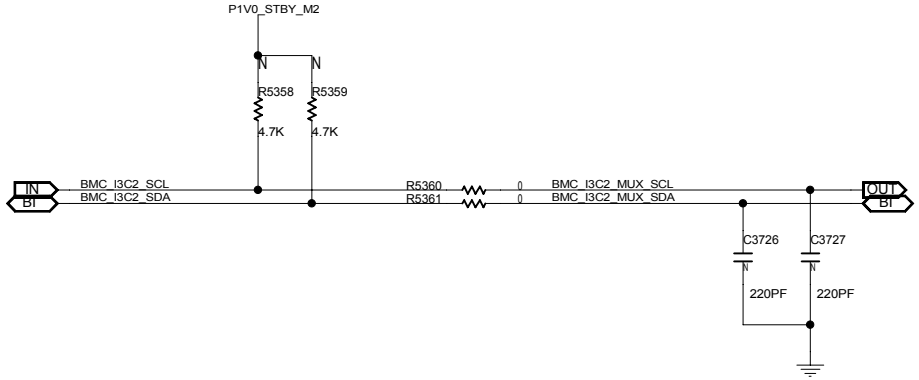

S	OE#	Function
L	L	D=1D
H	L	D=2D
X	H	Disconnect

MODULE=---

FUNCTION=---

CNIT TECHNOLOGIES CO.,LTD.				
BOARD NAME MB-CADT24D_VERA			DRAWINGNO CNIT0302K1XKDL	
DESIGNED	yujianjiang00259	DATE <DATE_DN>	SHEET 155 OF 200	REV
REVIEWED	<REVIEWED>	DATE <DATE_RW>	Sat Sep 13 15:56:29 2025	

THIS DOCUMENT AND THE TECHNICAL DATA DISCLOSED ARE PROPRIETARY TO CNIT TECHNOLOGIES CO., LTD. AND SHALL NOT BE DUPLICATED USED RELEASED OR DISCLOSED WITHOUT EXPRESSING WRITTEN PERMISSION.

I2C1

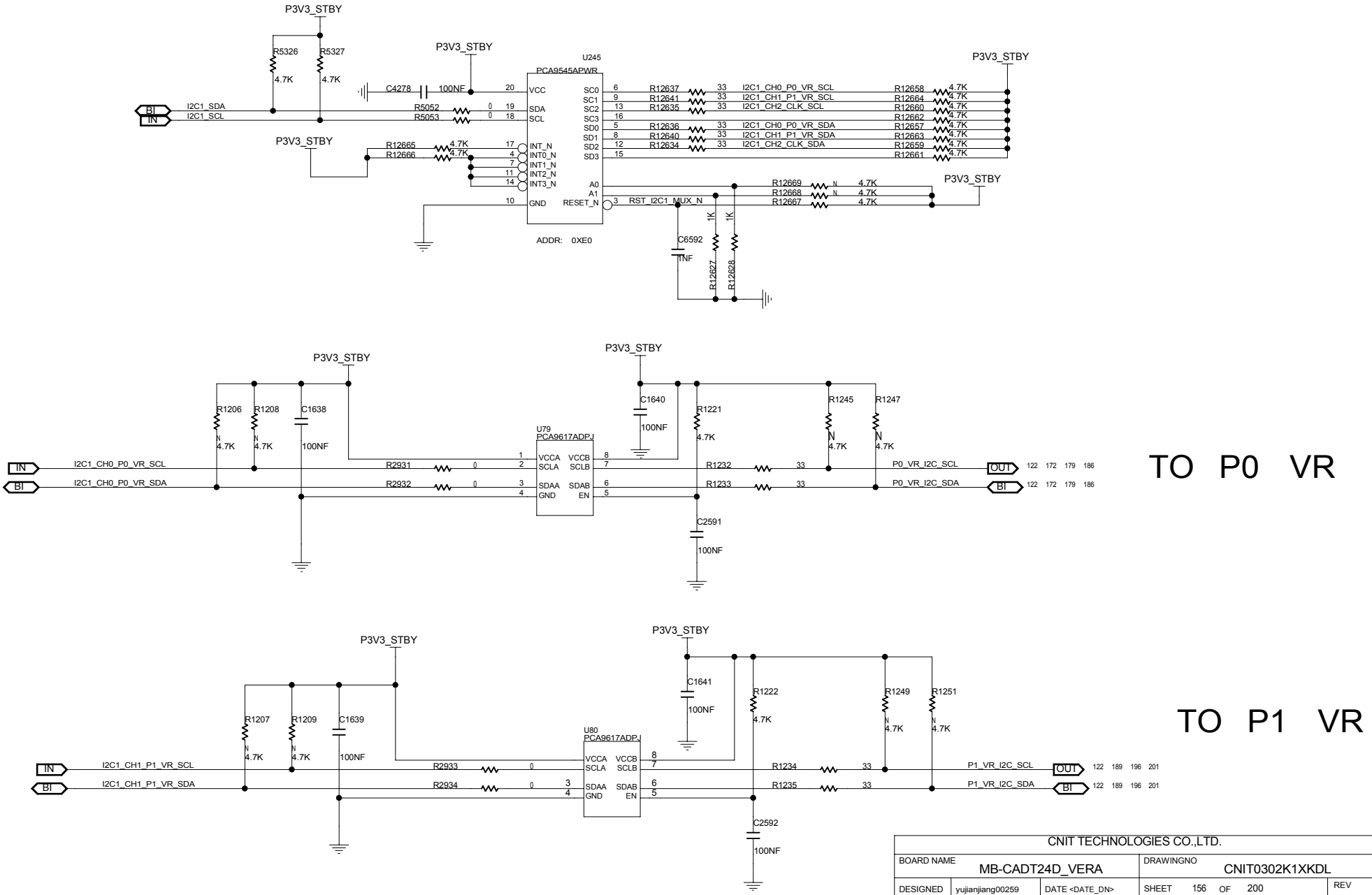

MODULE=---

FUNCTION=---

CNIT TECHNOLOGIES CO.,LTD.				
BOARD NAME MB-CADT24D_VERA			DRAWINGNO CNIT0302K1XKDL	
DESIGNED	yujianjiang00259	DATE <DATE_DN>	SHEET 156 OF 200	REV
REVIEWED	<REVIEWED>	DATE <DATE_RW>	Mon Sep 01 14:14:34 2025	

THIS DOCUMENT AND THE TECHNICAL DATA DISCLOSED ARE PROPRIETARY TO CNIT TECHNOLOGIES CO., LTD. AND SHALL NOT BE DUPLICATED USED RELEASED OR DISCLOSED WITHOUT EXPRESSING WRITTEN PERMISSION.

BMC I2C2

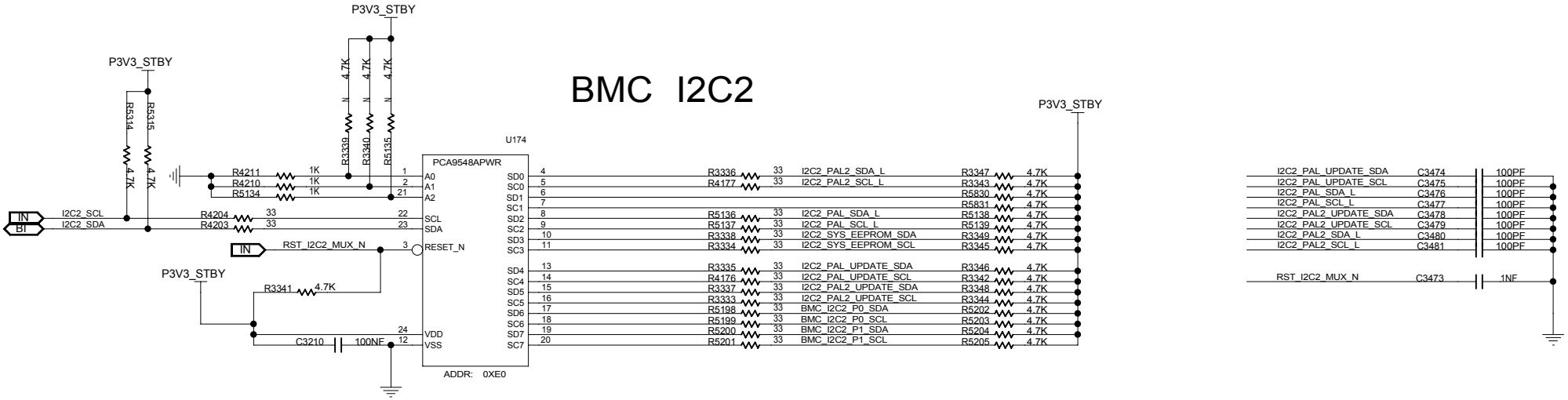

BMC I2C3

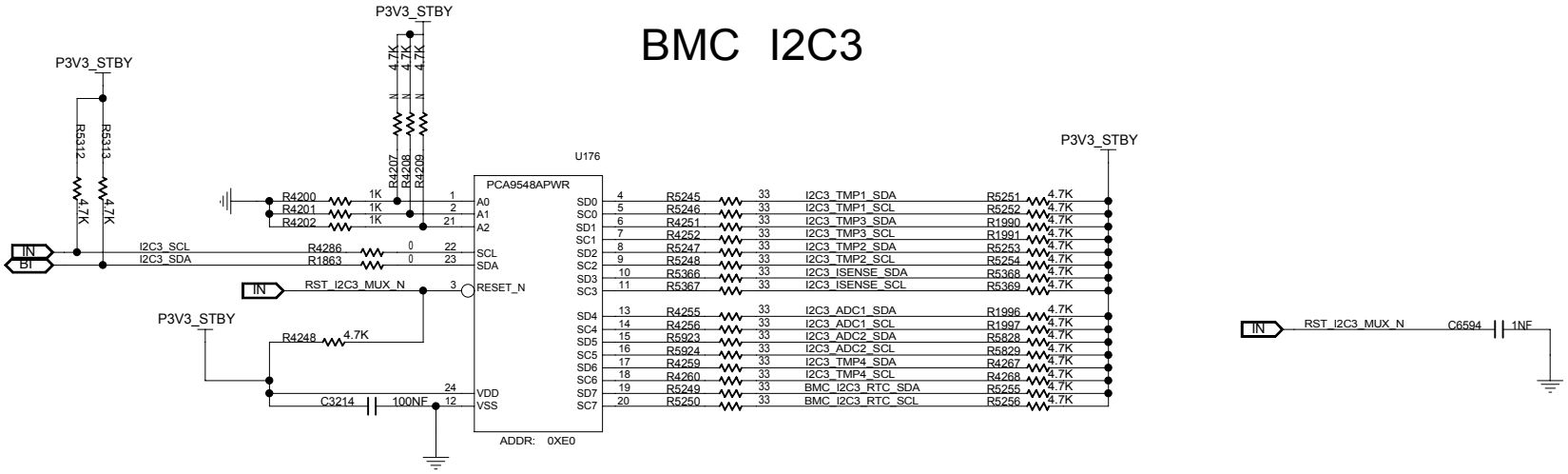

MODULE=---

FUNCTION=---

CNIT TECHNOLOGIES CO.,LTD.				
BOARD NAME MB-CADT24D_VERA			DRAWINGNO CNIT0302K1XKDL	
DESIGNED	yujianjiang00259	DATE <DATE_DN>	SHEET 157 OF 200	REV
REVIEWED	<REVIEWED>	DATE <DATE_RW>	Mon Sep 01 14:14:38 2025	

THIS DOCUMENT AND THE TECHNICAL DATA DISCLOSED ARE PROPRIETARY TO CNIT TECHNOLOGIES CO., LTD. AND SHALL NOT BE DUPLICATED USED RELEASED OR DISCLOSED WITHOUT EXPRESSING WRITTEN PERMISSION.

I2C4

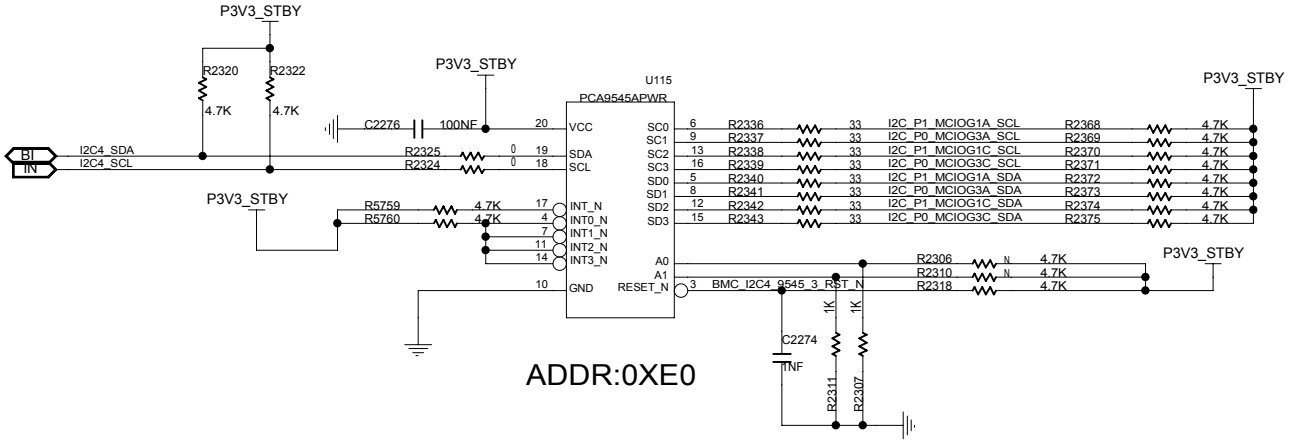

TO MCIO

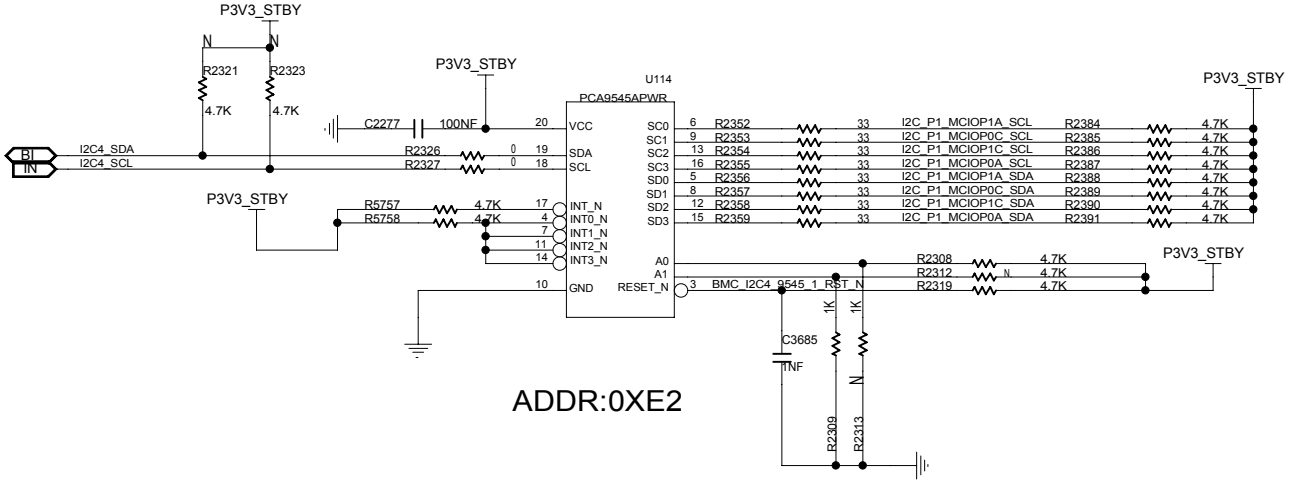

TO MCIO

MODULE=---
FUNCTION=---

CNIT TECHNOLOGIES CO.,LTD.				
BOARD NAME MB-CADT24D_VERA			DRAWINGNO CNIT0302K1XKDL	
DESIGNED	yujianjiang00259	DATE <DATE_DN>	SHEET 158 OF 200	REV
REVIEWED	<REVIEWED>	DATE <DATE_RW>	Sat Sep 13 17:36:16 2025	

THIS DOCUMENT AND THE TECHNICAL DATA DISCLOSED ARE PROPRIETARY TO CNIT TECHNOLOGIES CO., LTD. AND SHALL NOT BE DUPLICATED USED RELEASED OR DISCLOSED WITHOUT EXPRESSING WRITTEN PERMISSION.

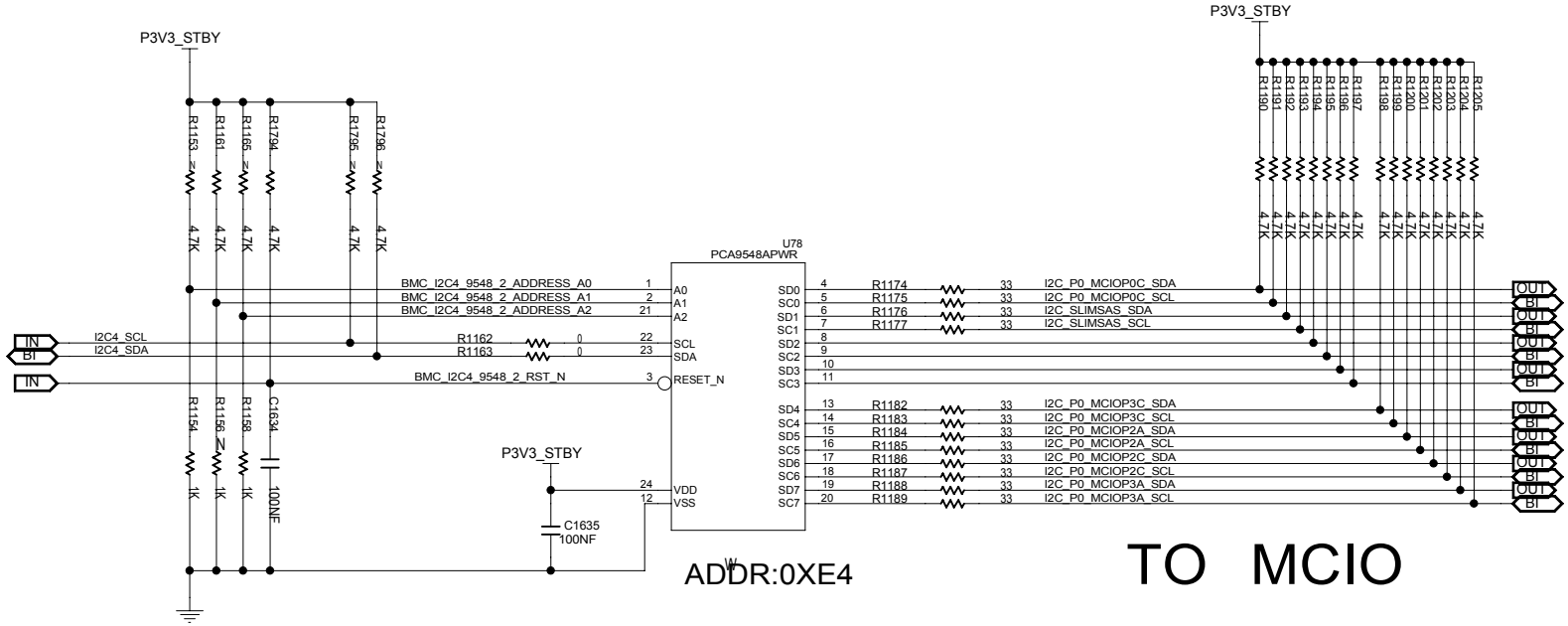

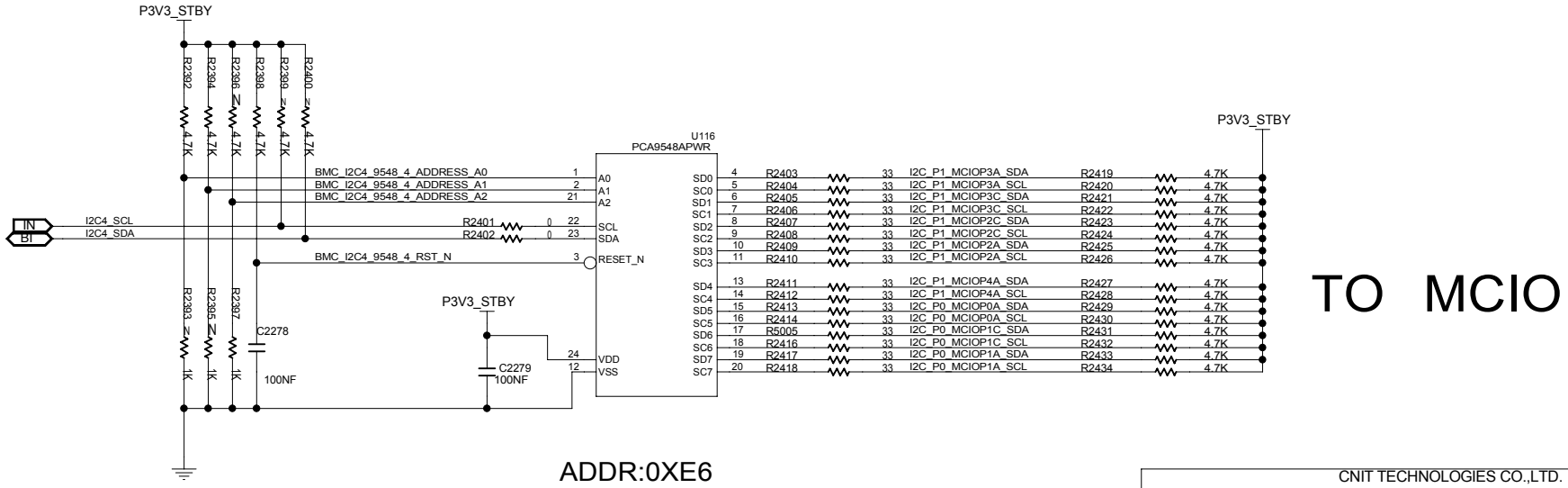

MODULE=---

FUNCTION=---

CNIT TECHNOLOGIES CO.,LTD.				
BOARD NAME MB-CADT24D_VERA			DRAWINGNO CNIT0302K1XKDL	
DESIGNED	yujianjiang00259	DATE <DATE_DN>	SHEET 159 OF 200	REV
REVIEWED	<REVIEWED>	DATE <DATE_RW>	Sat Sep 13 17:19:34 2025	

THIS DOCUMENT AND THE TECHNICAL DATA DISCLOSED ARE PROPRIETARY TO CNIT TECHNOLOGIES CO., LTD. AND SHALL NOT BE DUPLICATED USED RELEASED OR DISCLOSED WITHOUT EXPRESSING WRITTEN PERMISSION.

NOTE: ADDRESS 0X80

A0	SLAVE ADDRESS	
GND	1000000	Y
VS+	1000001	
SDA	1000010	
SCL	1000011	

NOTE:VS = 2.7V--5.5V

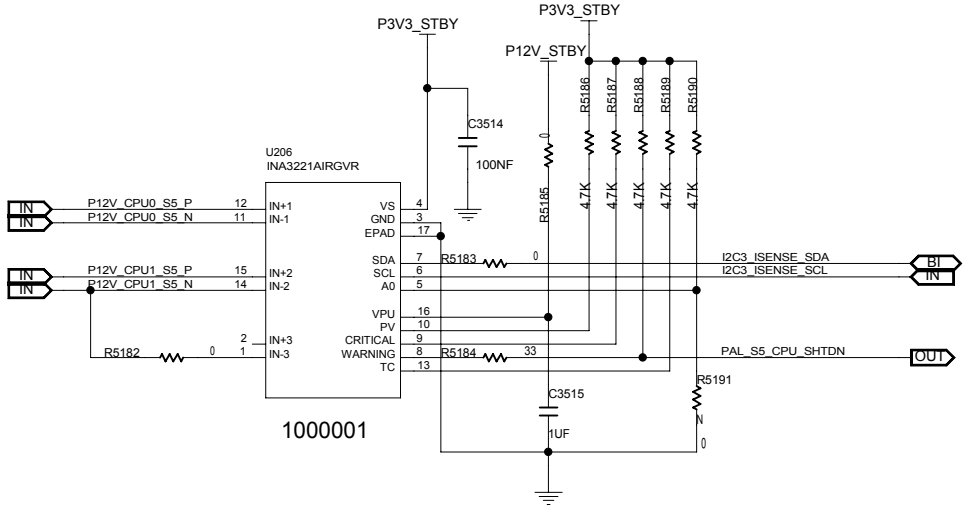

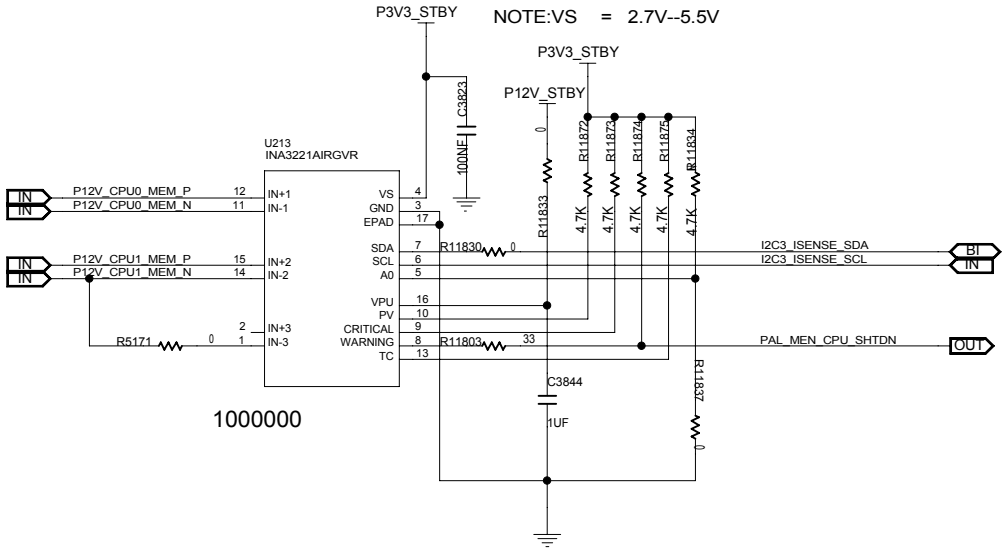

MODULE=---

FUNCTION=---

CNIT TECHNOLOGIES CO.,LTD.				
BOARD NAME	MB-CADT24D_VERA		DRAWINGNO	CNIT0302K1XKDL
DESIGNED	yujianjiang00259	DATE <DATE_DN>	SHEET 160 OF 200	REV
REVIEWED	<REVIEWED>	DATE <DATE_RW>	Mon Sep 01 14:14:45 2025	

THIS DOCUMENT AND THE TECHNICAL DATA DISCLOSED ARE PROPRIETARY TO CNIT TECHNOLOGIES CO., LTD. AND SHALL NOT BE DUPLICATED USED RELEASED OR DISCLOSED WITHOUT EXPRESSING WRITTEN PERMISSION.

CPU APML/SEC

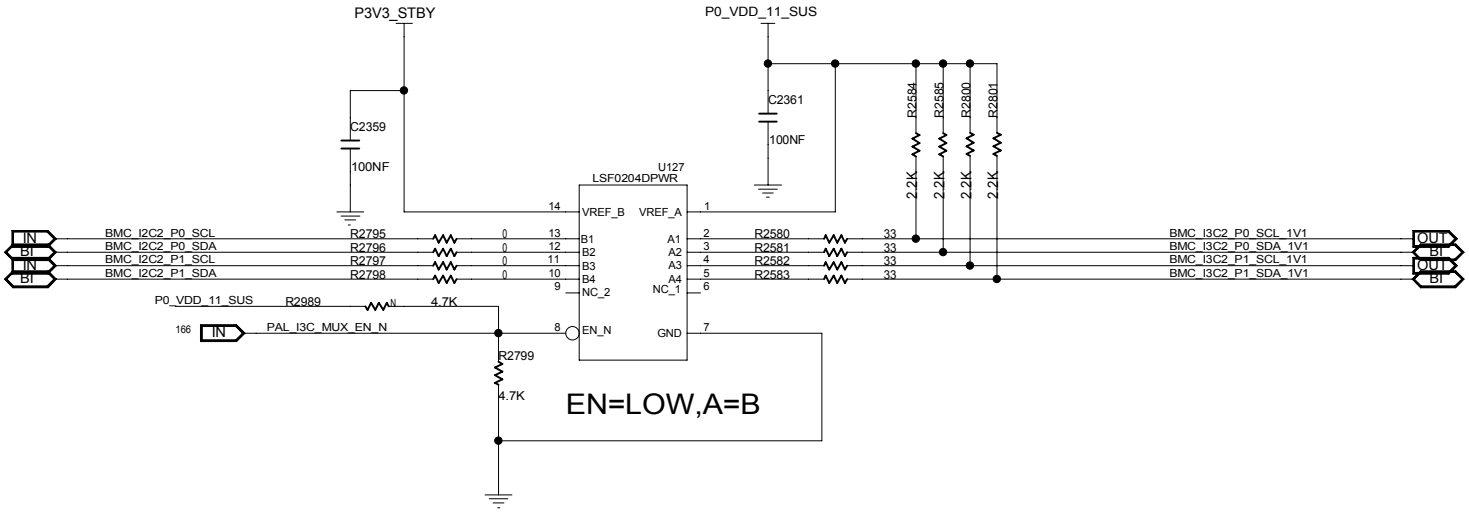

OE_N	Function
H	Hi-z
L	An=Bn

MODULE=---

FUNCTION=---

CNIT TECHNOLOGIES CO.,LTD.				
BOARD NAME MB-CADT24D_VERA			DRAWINGNO CNIT0302K1XKDL	
DESIGNED	yujianjiang00259	DATE <DATE_DN>	SHEET 161 OF 200	REV
REVIEWED	<REVIEWED>	DATE <DATE_RW>	Mon Sep 01 14:14:48 2025	

THIS DOCUMENT AND THE TECHNICAL DATA DISCLOSED ARE PROPRIETARY TO CNIT TECHNOLOGIES CO., LTD. AND SHALL NOT BE DUPLICATED USED RELEASED OR DISCLOSED WITHOUT EXPRESSING WRITTEN PERMISSION.

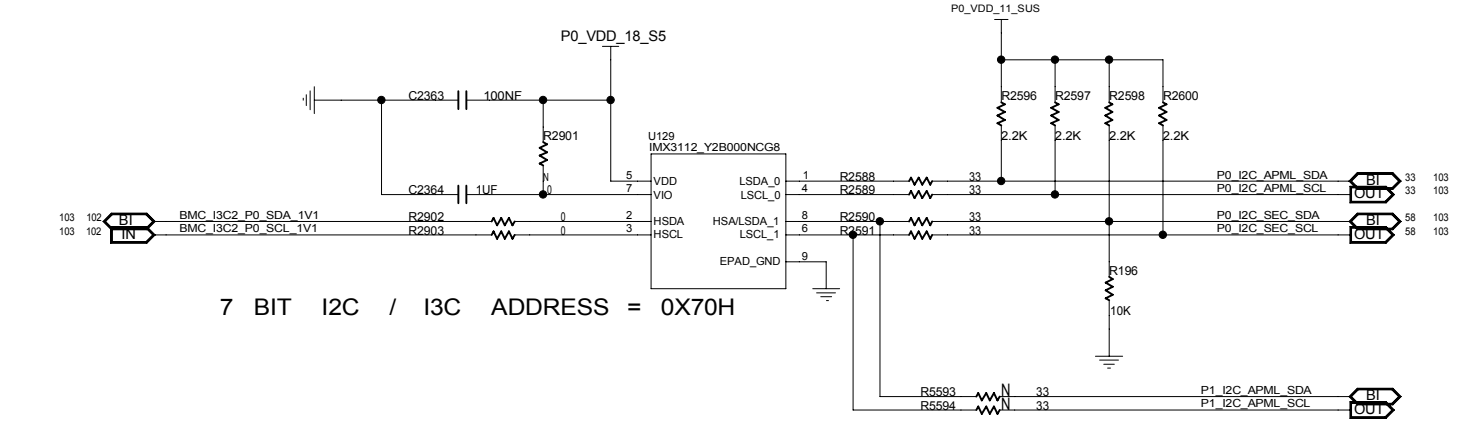

TO CPU0

7 BIT I2C / I3C ADDRESS = 0X70H

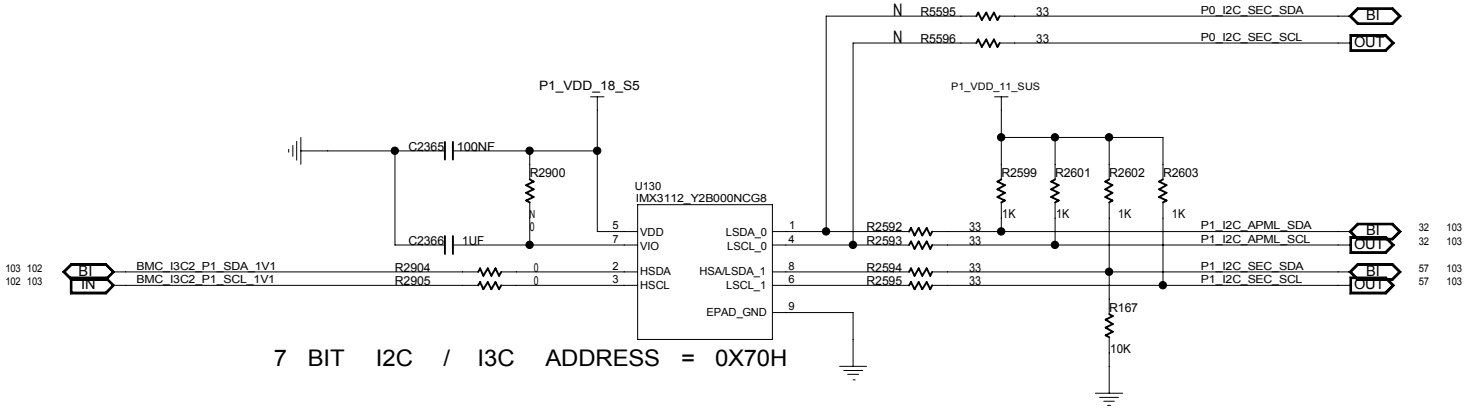

TO CPU1

7 BIT I2C / I3C ADDRESS = 0X70H

MODULE=---
FUNCTION=---

CNIT TECHNOLOGIES CO.,LTD.				
BOARD NAME MB-CADT24D_VERA			DRAWINGNO CNIT0302K1XKDL	
DESIGNED	yujianjiang00259	DATE <DATE_DN>	SHEET 162 OF 200	REV
REVIEWED	<REVIEWED>	DATE <DATE_RW>	Sat Sep 13 17:45:40 2025	

THIS DOCUMENT AND THE TECHNICAL DATA DISCLOSED ARE PROPRIETARY TO CNIT TECHNOLOGIES CO., LTD. AND SHALL NOT BE DUPLICATED USED RELEASED OR DISCLOSED WITHOUT EXPRESSING WRITTEN PERMISSION.

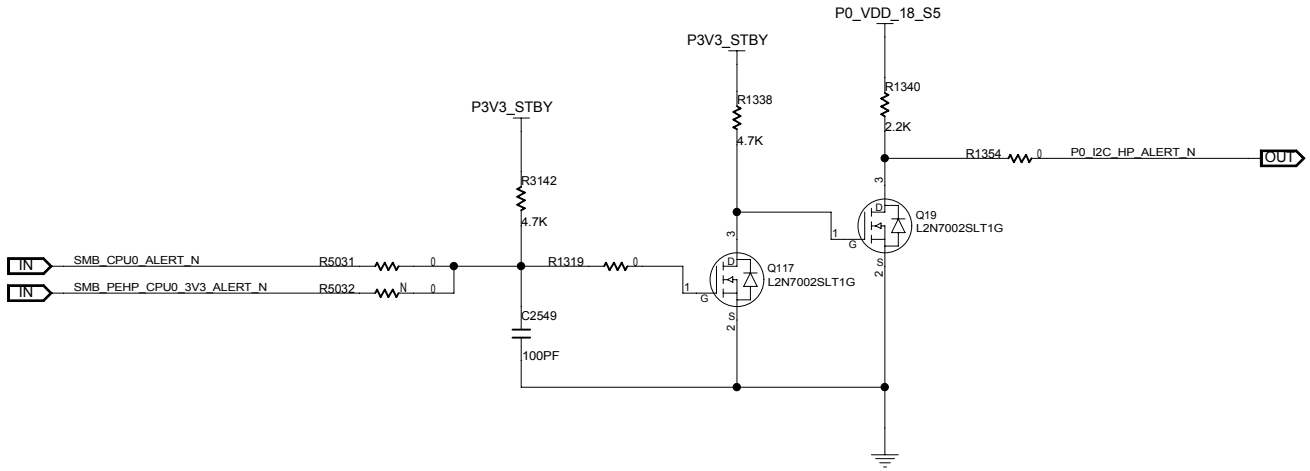

MODULE=---
FUNCTION=---

CNIT TECHNOLOGIES CO.,LTD.				
BOARD NAME MB-CADT24D_VERA			DRAWINGNO CNIT0302K1XKDL	
DESIGNED	yujianjiang00259	DATE <DATE_DN>	SHEET 163 OF 200	REV
REVIEWED	<REVIEWED>	DATE <DATE_RW>	Mon Sep 01 14:14:52 2025	

THIS DOCUMENT AND THE TECHNICAL DATA DISCLOSED ARE PROPRIETARY TO CNIT TECHNOLOGIES CO., LTD. AND SHALL NOT BE DUPLICATED USED RELEASED OR DISCLOSED WITHOUT EXPRESSING WRITTEN PERMISSION.

CPU0 I2C5

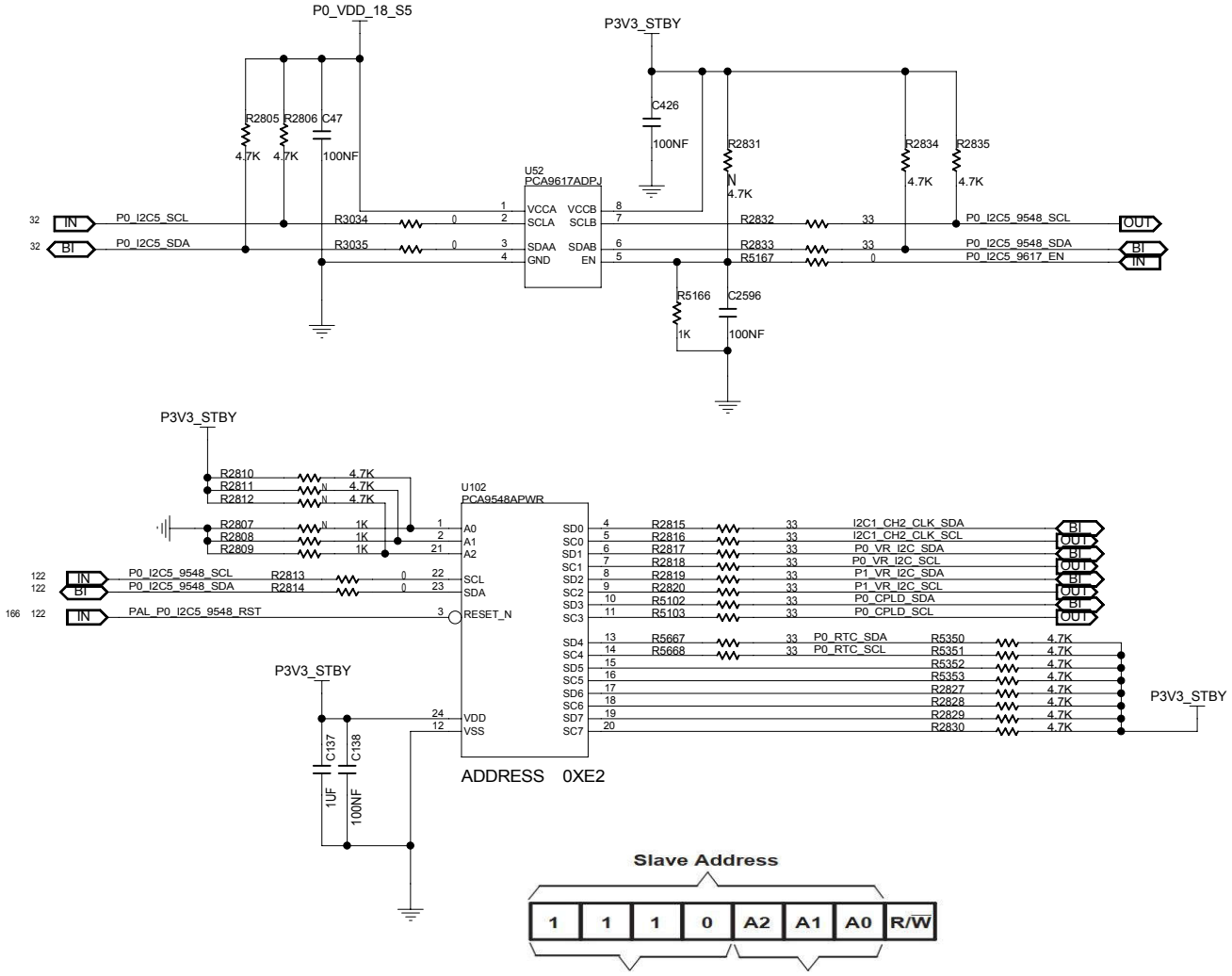

Slave Address

1	1	1	0	A2	A1	A0	R/W

MODULE=---

FUNCTION=---

CNIT TECHNOLOGIES CO.,LTD.				
BOARD NAME MB-CADT24D_VERA			DRAWINGNO CNIT0302K1XKDL	
DESIGNED	yujianjiang00259	DATE <DATE_DN>	SHEET 164 OF 200	REV
REVIEWED	<REVIEWED>	DATE <DATE_RW>	Sat Sep 13 17:47:44 2025	

THIS DOCUMENT AND THE TECHNICAL DATA DISCLOSED ARE PROPRIETARY TO CNIT TECHNOLOGIES CO., LTD. AND SHALL NOT BE DUPLICATED USED RELEASED OR DISCLOSED WITHOUT EXPRESSING WRITTEN PERMISSION.

CPU0 I2C4 VPP

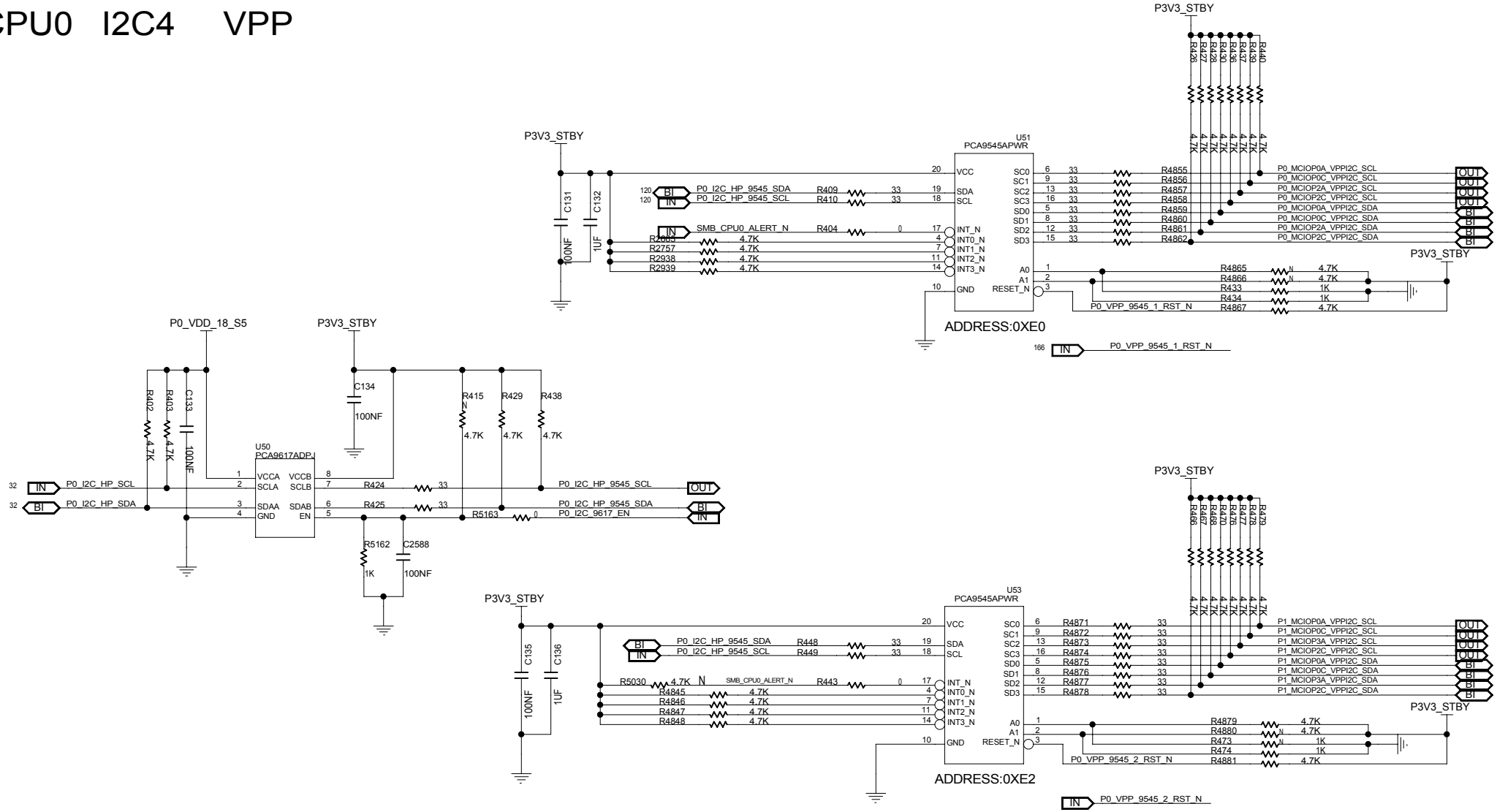

MODULE=---

FUNCTION=---

CNIT TECHNOLOGIES CO.,LTD.				
BOARD NAME MB-CADT24D_VERA			DRAWINGNO CNIT0302K1XKDL	
DESIGNED	yujianjiang00259	DATE <DATE_DN>	SHEET 165 OF 200	REV
REVIEWED	<REVIEWED>	DATE <DATE_RW>	Sat Sep 13 17:50:07 2025	

THIS DOCUMENT AND THE TECHNICAL DATA DISCLOSED ARE PROPRIETARY TO CNIT TECHNOLOGIES CO., LTD. AND SHALL NOT BE DUPLICATED USED RELEASED OR DISCLOSED WITHOUT EXPRESSING WRITTEN PERMISSION.

CPU0 I2C4 VPP

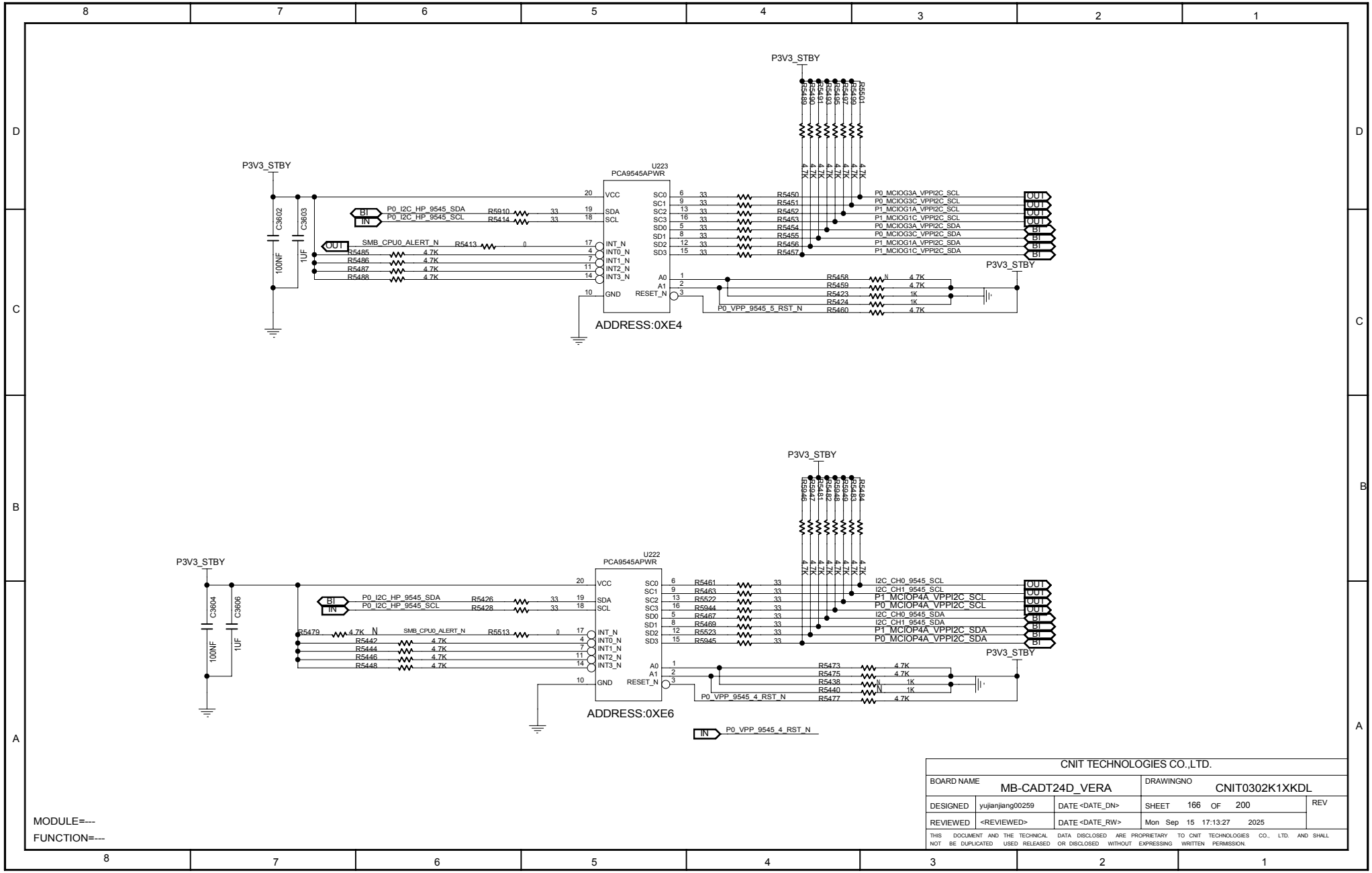

CPU0 I2C4 VPP

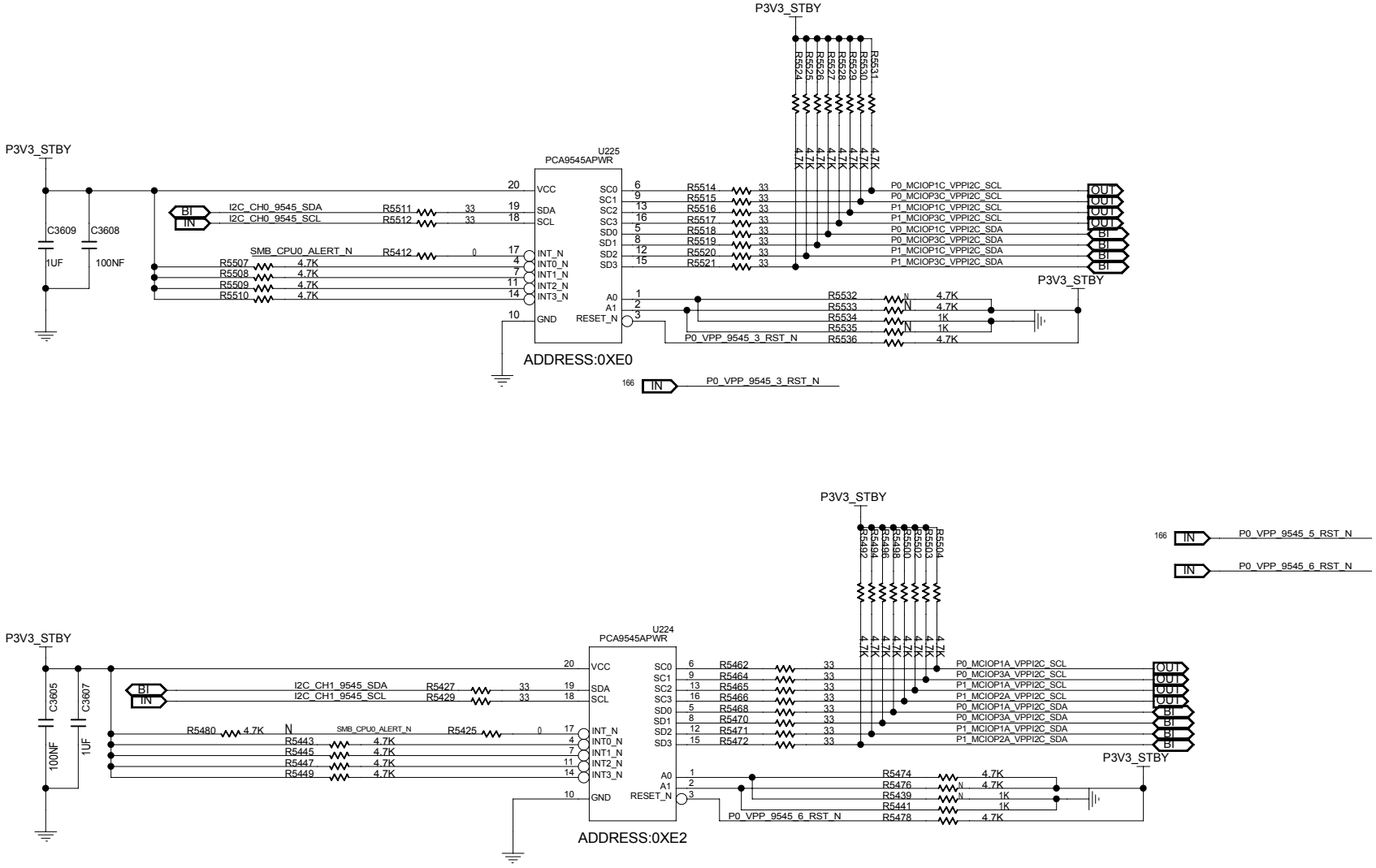

CNIT TECHNOLOGIES CO.,LTD.				
BOARD NAME MB-CADT24D_VERA			DRAWINGNO CNIT0302K1XKDL	
DESIGNED	yujianjiang00259	DATE <DATE_DN>	SHEET 167 OF 200	REV
REVIEWED	<REVIEWED>	DATE <DATE_RW>	Sat Sep 13 18:22:11 2025	

THIS DOCUMENT AND THE TECHNICAL DATA DISCLOSED ARE PROPRIETARY TO CNIT TECHNOLOGIES CO., LTD. AND SHALL NOT BE DUPLICATED USED RELEASED OR DISCLOSED WITHOUT EXPRESSING WRITTEN PERMISSION.

MODULE=---

FUNCTION=---

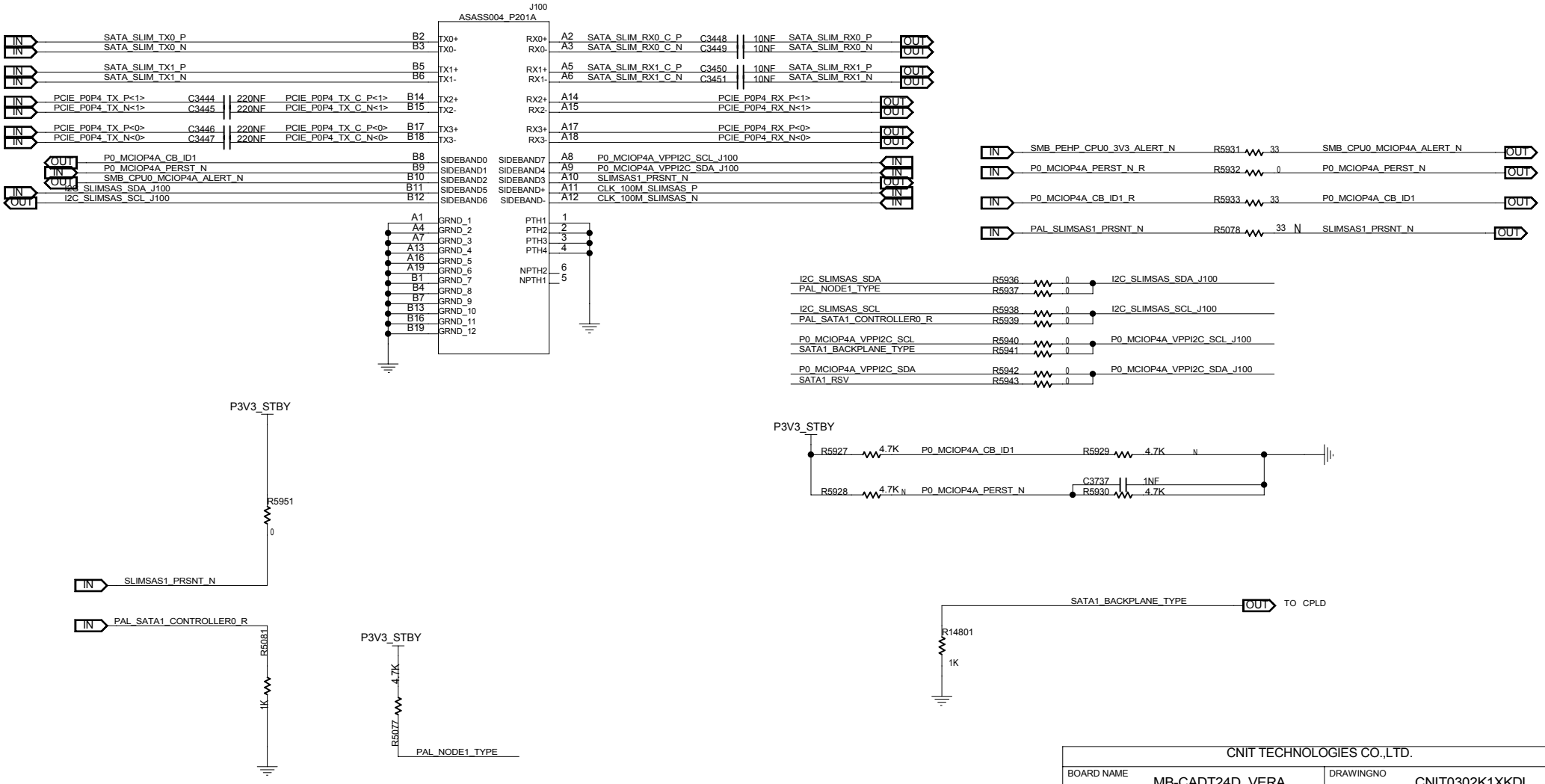

MODULE=---

FUNCTION=---

CNIT TECHNOLOGIES CO.,LTD.				
BOARD NAME MB-CADT24D_VERA			DRAWINGNO CNIT0302K1XKDL	
DESIGNED	yujianjiang00259	DATE <DATE_DN>	SHEET 168 OF 200	REV
REVIEWED	<REVIEWED>	DATE <DATE_RW>	Sat Sep 13 18:23:06 2025	

THIS DOCUMENT AND THE TECHNICAL DATA DISCLOSED ARE PROPRIETARY TO CNIT TECHNOLOGIES CO., LTD. AND SHALL NOT BE DUPLICATED USED RELEASED OR DISCLOSED WITHOUT EXPRESSING WRITTEN PERMISSION.

JTAG & HDT

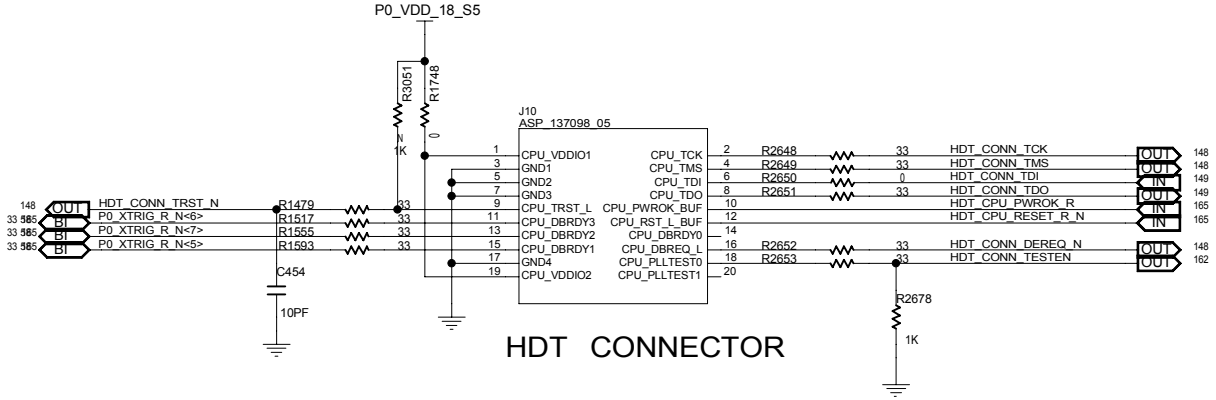

HDT CONNECTOR

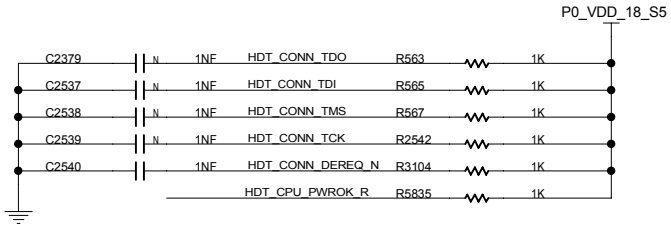

MODULE=---

FUNCTION=---

CNIT TECHNOLOGIES CO.,LTD.				
BOARD NAME MB-CADT24D_VERA			DRAWINGNO CNIT0302K1XKDL	
DESIGNED	yujianjiang00259	DATE <DATE_DN>	SHEET 169 OF 200	REV
REVIEWED	<REVIEWED>	DATE <DATE_RW>	Mon Sep 01 14:15:06 2025	

THIS DOCUMENT AND THE TECHNICAL DATA DISCLOSED ARE PROPRIETARY TO CNIT TECHNOLOGIES CO., LTD. AND SHALL NOT BE DUPLICATED USED RELEASED OR DISCLOSED WITHOUT EXPRESSING WRITTEN PERMISSION.

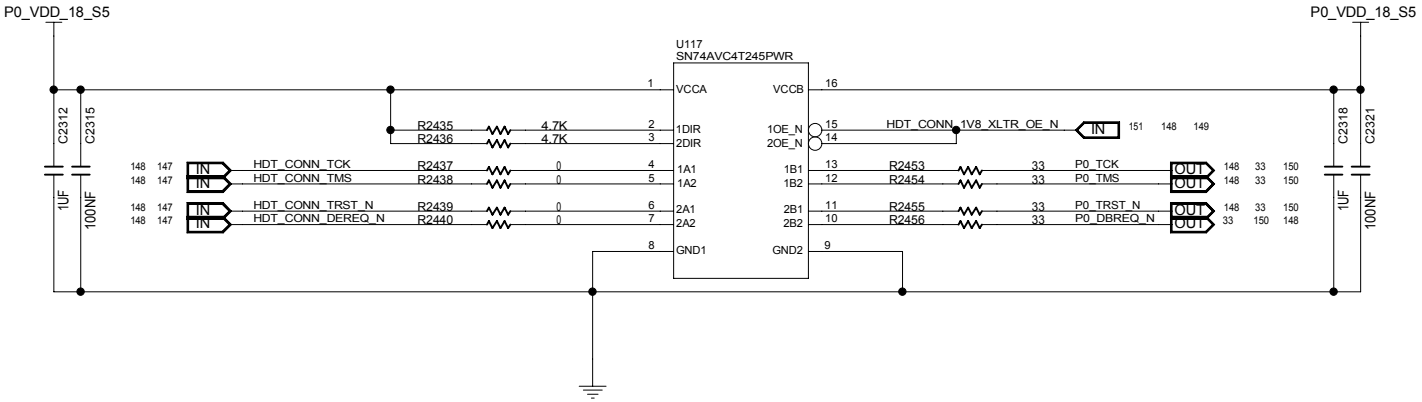

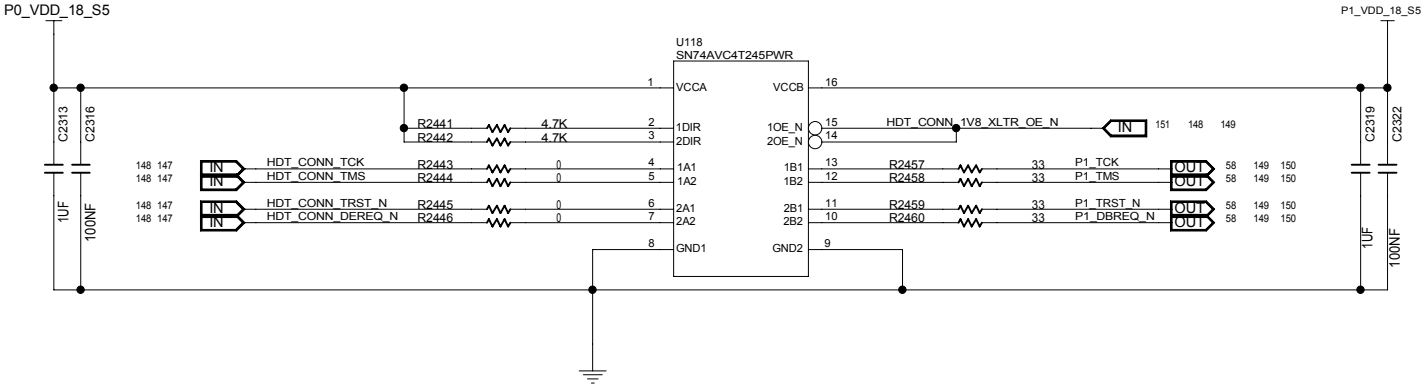

MODULE=---

FUNCTION=---

CNIT TECHNOLOGIES CO.,LTD.				
BOARD NAME MB-CADT24D_VERA			DRAWINGNO CNIT0302K1XKDL	
DESIGNED	yujianjiang00259	DATE <DATE_DN>	SHEET 170 OF 200	REV
REVIEWED	<REVIEWED>	DATE <DATE_RW>	Fri Aug 29 11:21:58 2025	

THIS DOCUMENT AND THE TECHNICAL DATA DISCLOSED ARE PROPRIETARY TO CNIT TECHNOLOGIES CO., LTD. AND SHALL NOT BE DUPLICATED USED RELEASED OR DISCLOSED WITHOUT EXPRESSING WRITTEN PERMISSION.

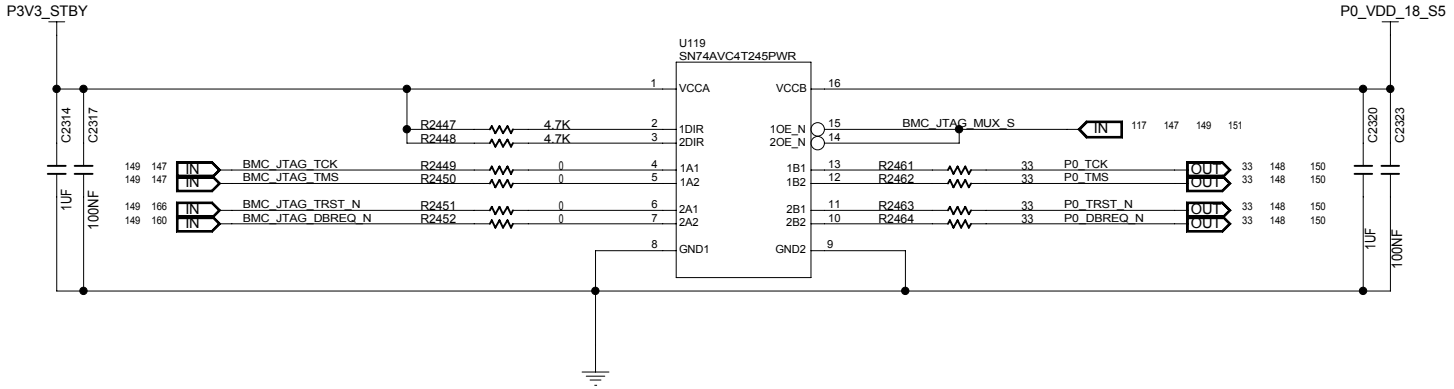

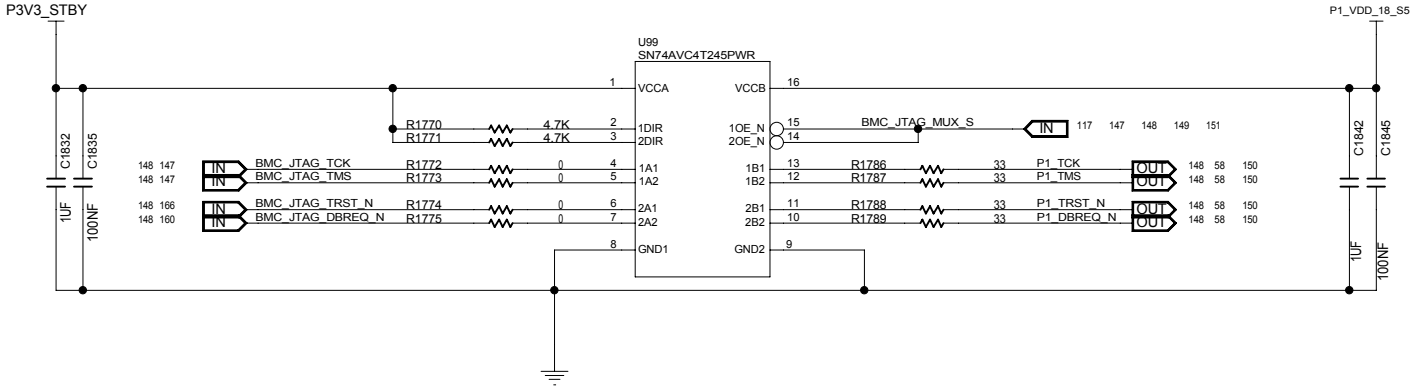

MODULE=---

FUNCTION=---

CNIT TECHNOLOGIES CO.,LTD.				
BOARD NAME MB-CADT24D_VERA			DRAWINGNO CNIT0302K1XKDL	
DESIGNED	yujianjiang00259	DATE <DATE_DN>	SHEET 171 OF 200	REV
REVIEWED	<REVIEWED>	DATE <DATE_RW>	Fri Aug 29 11:21:59 2025	

THIS DOCUMENT AND THE TECHNICAL DATA DISCLOSED ARE PROPRIETARY TO CNIT TECHNOLOGIES CO., LTD. AND SHALL NOT BE DUPLICATED USED RELEASED OR DISCLOSED WITHOUT EXPRESSING WRITTEN PERMISSION.

JTAG

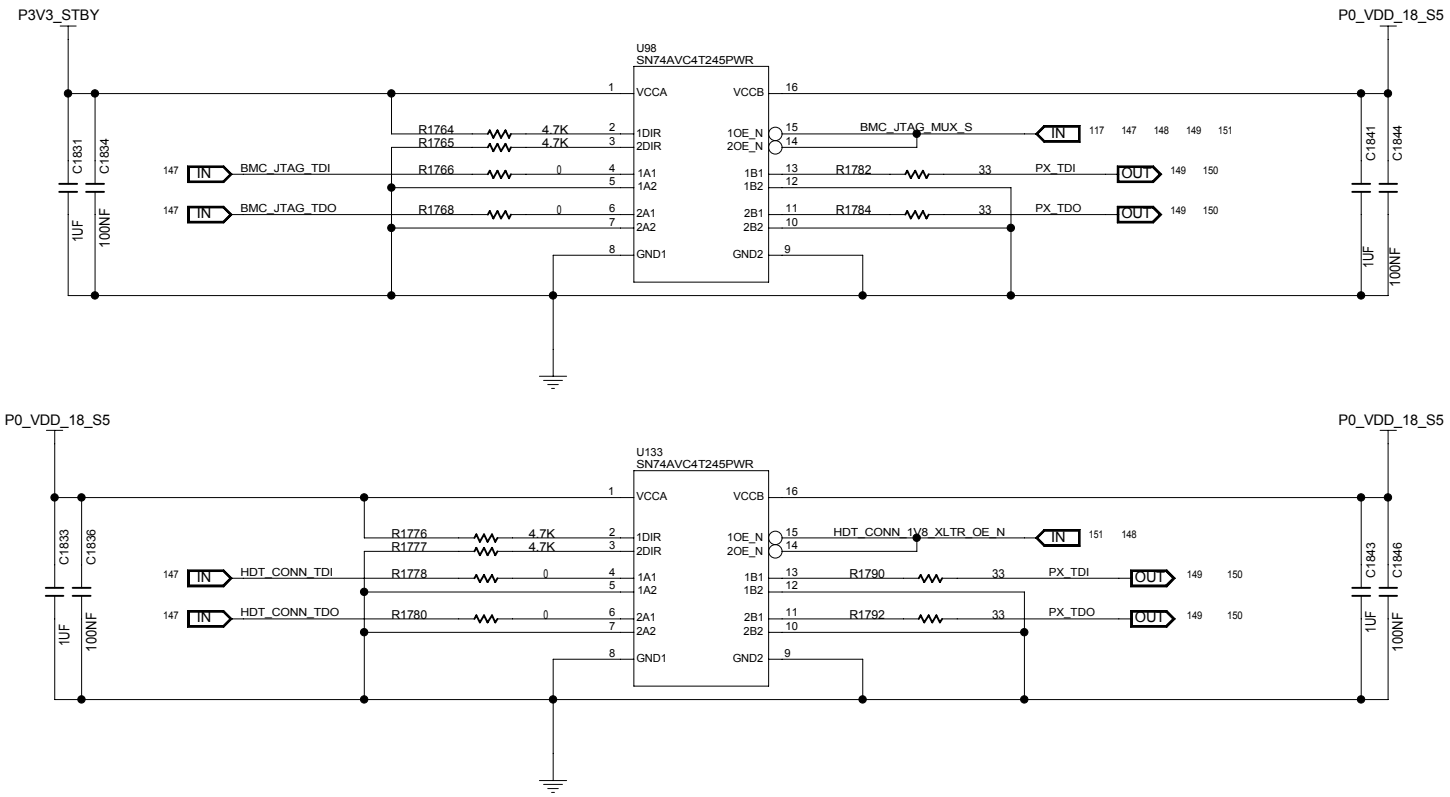

CONTROL INPUTS		OUTPUT CIRCUITS		OPERATION
$\overline{OE}$	DIR	A PORT	B PORT	
L	L	Enabled	Hi-Z	B data to A bus
L	H	Hi-Z	Enabled	A data to B bus
H	X	Hi-Z	Hi-Z	Isolation

MODULE=---
FUNCTION=---

CNIT TECHNOLOGIES CO.,LTD.				
BOARD NAME MB-CADT24D_VERA			DRAWINGNO CNIT0302K1XKDL	
DESIGNED	yujianjiang00259	DATE <DATE_DN>	SHEET 172 OF 200	REV
REVIEWED	<REVIEWED>	DATE <DATE_RW>	Fri Aug 29 11:21:59 2025	

THIS DOCUMENT AND THE TECHNICAL DATA DISCLOSED ARE PROPRIETARY TO CNIT TECHNOLOGIES CO., LTD. AND SHALL NOT BE DUPLICATED USED RELEASED OR DISCLOSED WITHOUT EXPRESSING WRITTEN PERMISSION.

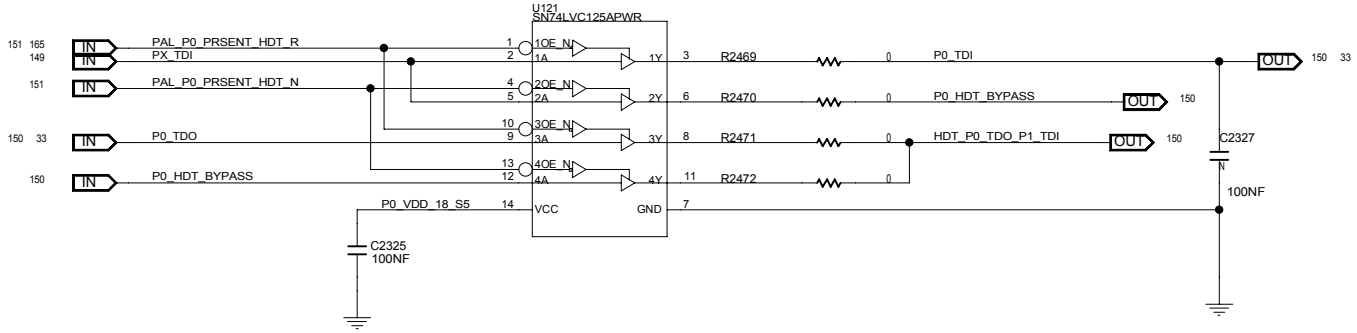

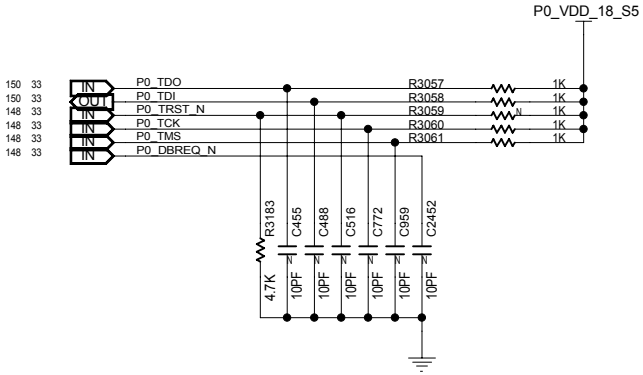

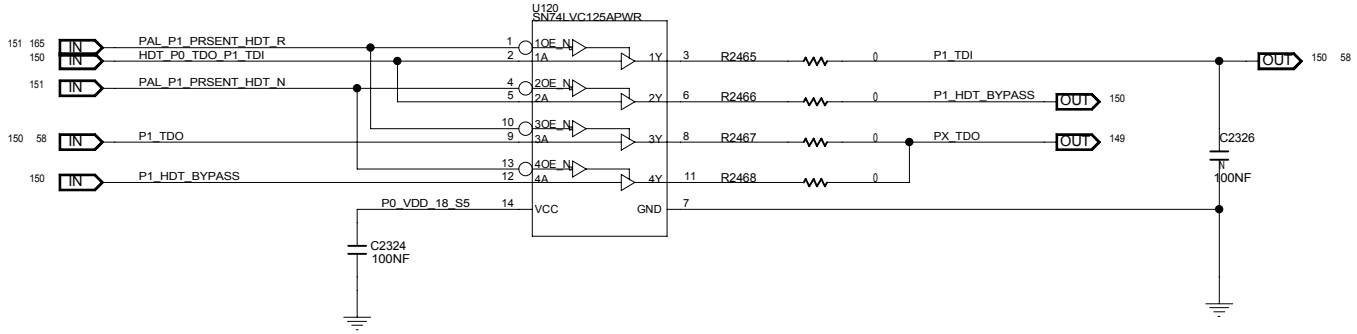

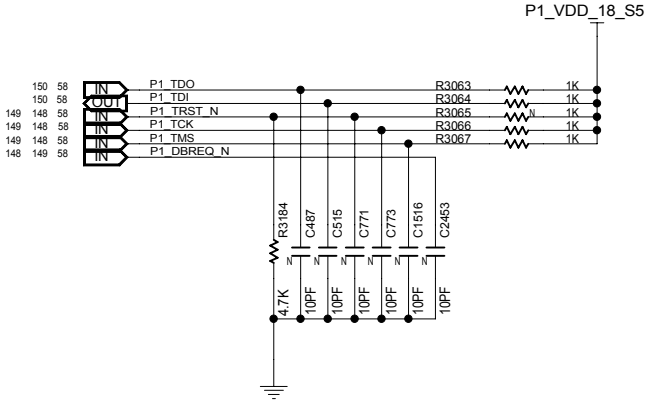

PAL_P0_PRSENT_HDT	PAL_P1_PRSENT_HDT	描述
0	1	PX_TDI -> P0_TDI PX_TDO <- P0_TDO
1	0	PX_TDI -> P1_TDI PX_TDO <- P1_TDO
0	0	PX_TDI -> P0_TDI P0_TDO -> P1_TDI PX_TDO <- P1_TDO

MODULE=---
FUNCTION=---

CNIT TECHNOLOGIES CO.,LTD.

BOARD NAME	MB-CADT24D_VERA	DRAWINGNO	CNIT0302K1XKDL
DESIGNED	yujianjiang00259	DATE <DATE_DN>	SHEET 173 OF 200
REVIEWED	<REVIEWED>	DATE <DATE_RW>	Mon Sep 01 14:15:09 2025

REV

THIS DOCUMENT AND THE TECHNICAL DATA DISCLOSED ARE PROPRIETARY TO CNIT TECHNOLOGIES CO., LTD. AND SHALL NOT BE DUPLICATED USED RELEASED OR DISCLOSED WITHOUT EXPRESSING WRITTEN PERMISSION.

JTAG

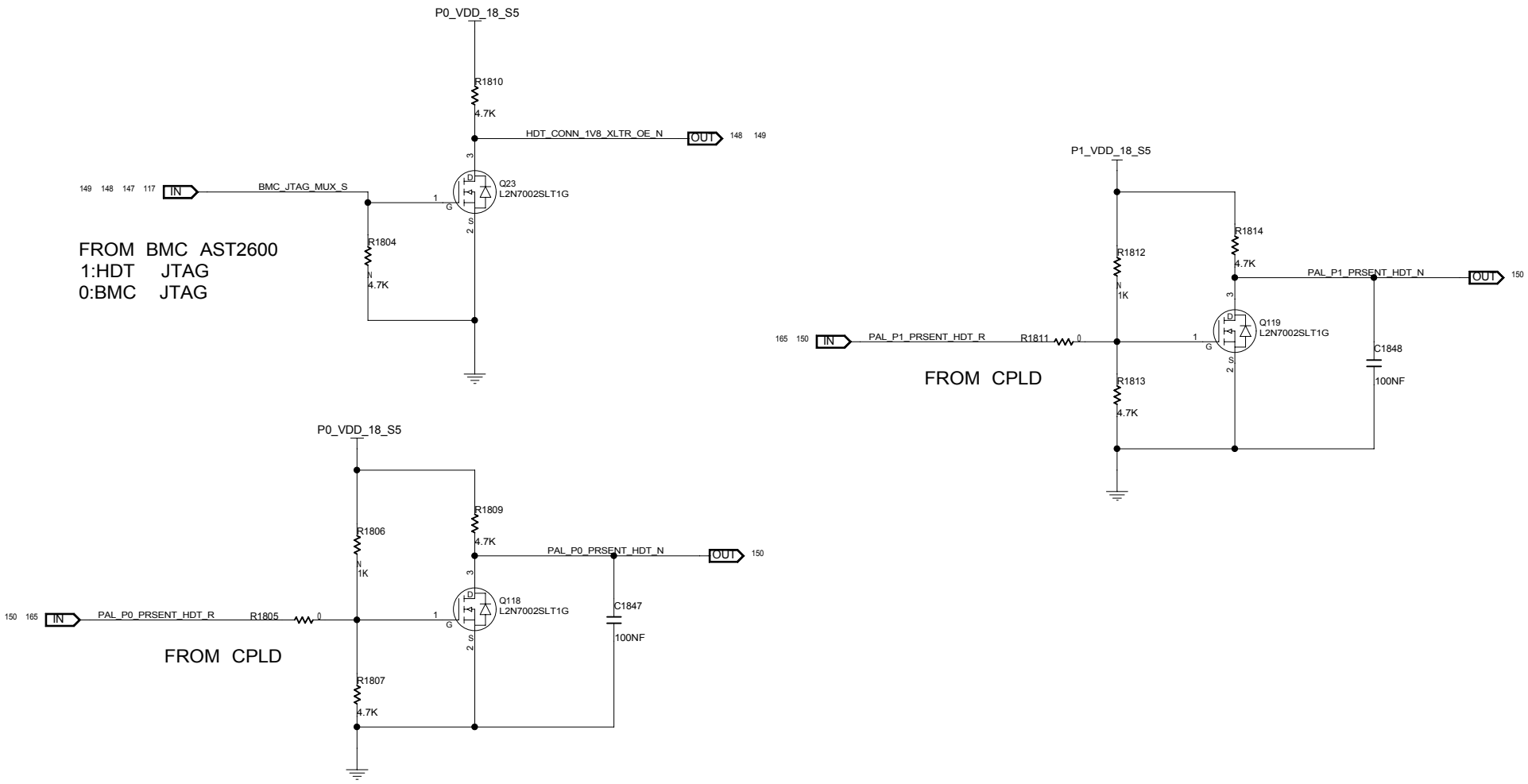

MODULE=---

FUNCTION=---

CNIT TECHNOLOGIES CO.,LTD.				
BOARD NAME MB-CADT24D_VERA			DRAWINGNO CNIT0302K1XKDL	
DESIGNED	yujianjiang00259	DATE <DATE_DN>	SHEET 174 OF 200	REV
REVIEWED	<REVIEWED>	DATE <DATE_RW>	Mon Sep 01 14:15:11 2025	

THIS DOCUMENT AND THE TECHNICAL DATA DISCLOSED ARE PROPRIETARY TO CNIT TECHNOLOGIES CO., LTD. AND SHALL NOT BE DUPLICATED USED RELEASED OR DISCLOSED WITHOUT EXPRESSING WRITTEN PERMISSION.

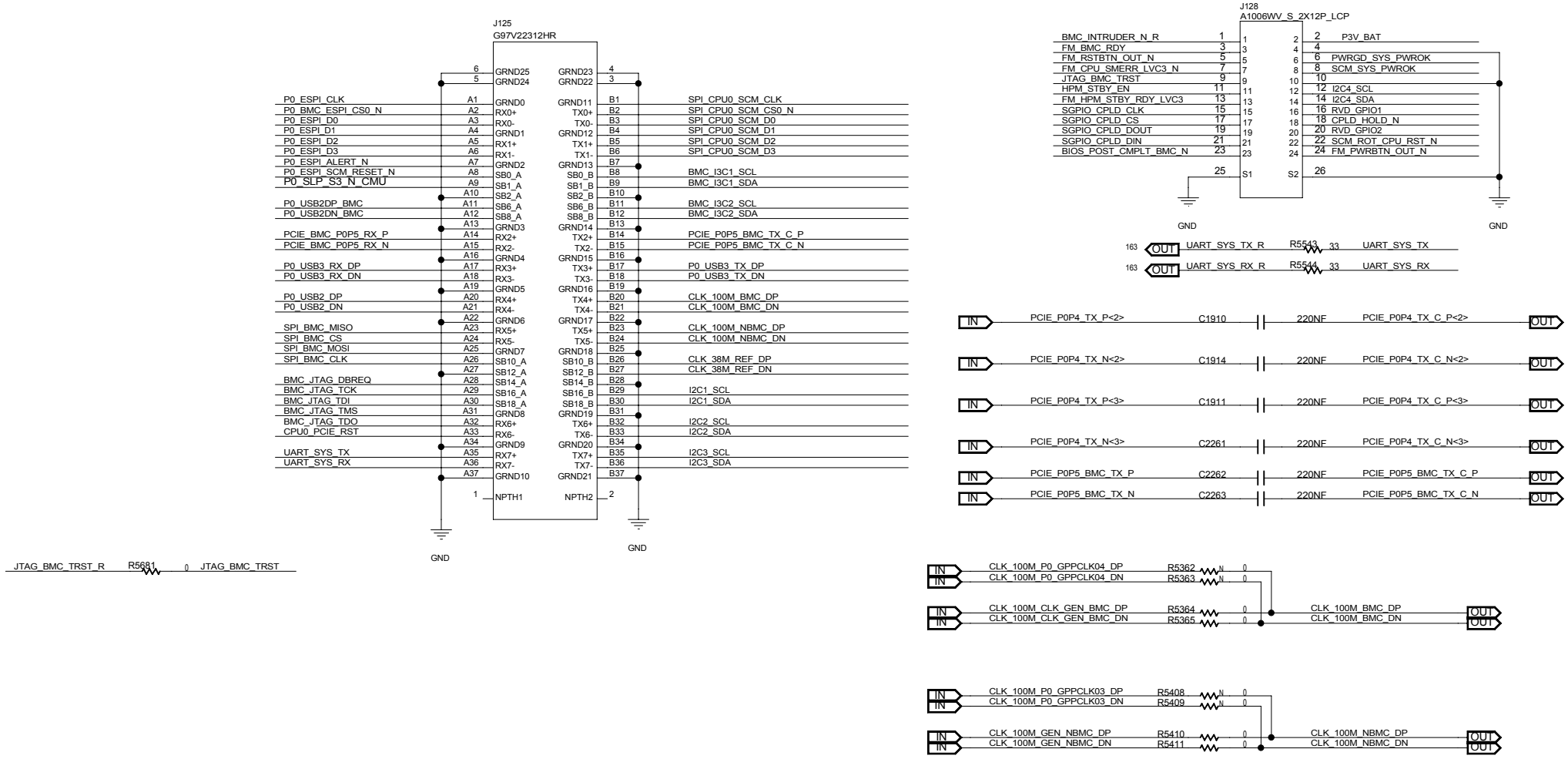

MODULE=---

FUNCTION=---

CNIT TECHNOLOGIES CO.,LTD.				
BOARD NAME MB-CADT24D_VERA			DRAWINGNO CNIT0302K1XKDL	
DESIGNED	yujianjiang00259	DATE <DATE_DN>	SHEET 175 OF 200	REV
REVIEWED	<REVIEWED>	DATE <DATE_RW>	Thu Sep 04 21:01:18 2025	

THIS DOCUMENT AND THE TECHNICAL DATA DISCLOSED ARE PROPRIETARY TO CNIT TECHNOLOGIES CO., LTD. AND SHALL NOT BE DUPLICATED USED RELEASED OR DISCLOSED WITHOUT EXPRESSING WRITTEN PERMISSION.

CPLD_1

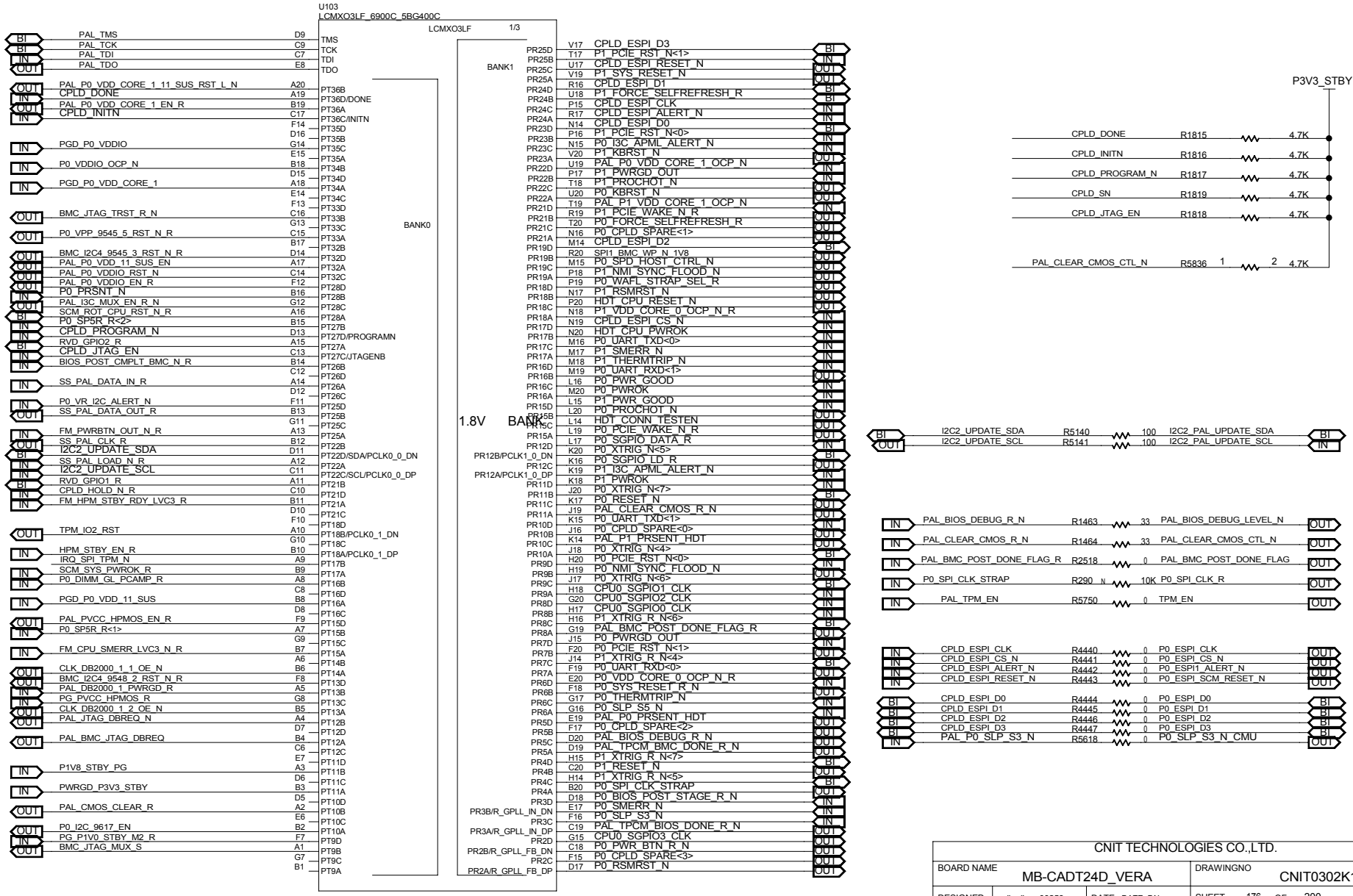

MODULE=---

FUNCTION=---

CNIT TECHNOLOGIES CO.,LTD.				
BOARD NAME MB-CADT24D_VERA			DRAWINGNO CNIT0302K1XKDL	
DESIGNED	yujianjiang00259	DATE <DATE_DN>	SHEET 176 OF 200	REV
REVIEWED	<REVIEWED>	DATE <DATE_RW>	Mon Sep 15 19:50:43 2025	

THIS DOCUMENT AND THE TECHNICAL DATA DISCLOSED ARE PROPRIETARY TO CNIT TECHNOLOGIES CO., LTD. AND SHALL NOT BE DUPLICATED USED RELEASED OR DISCLOSED WITHOUT EXPRESSING WRITTEN PERMISSION.

CPLD_2

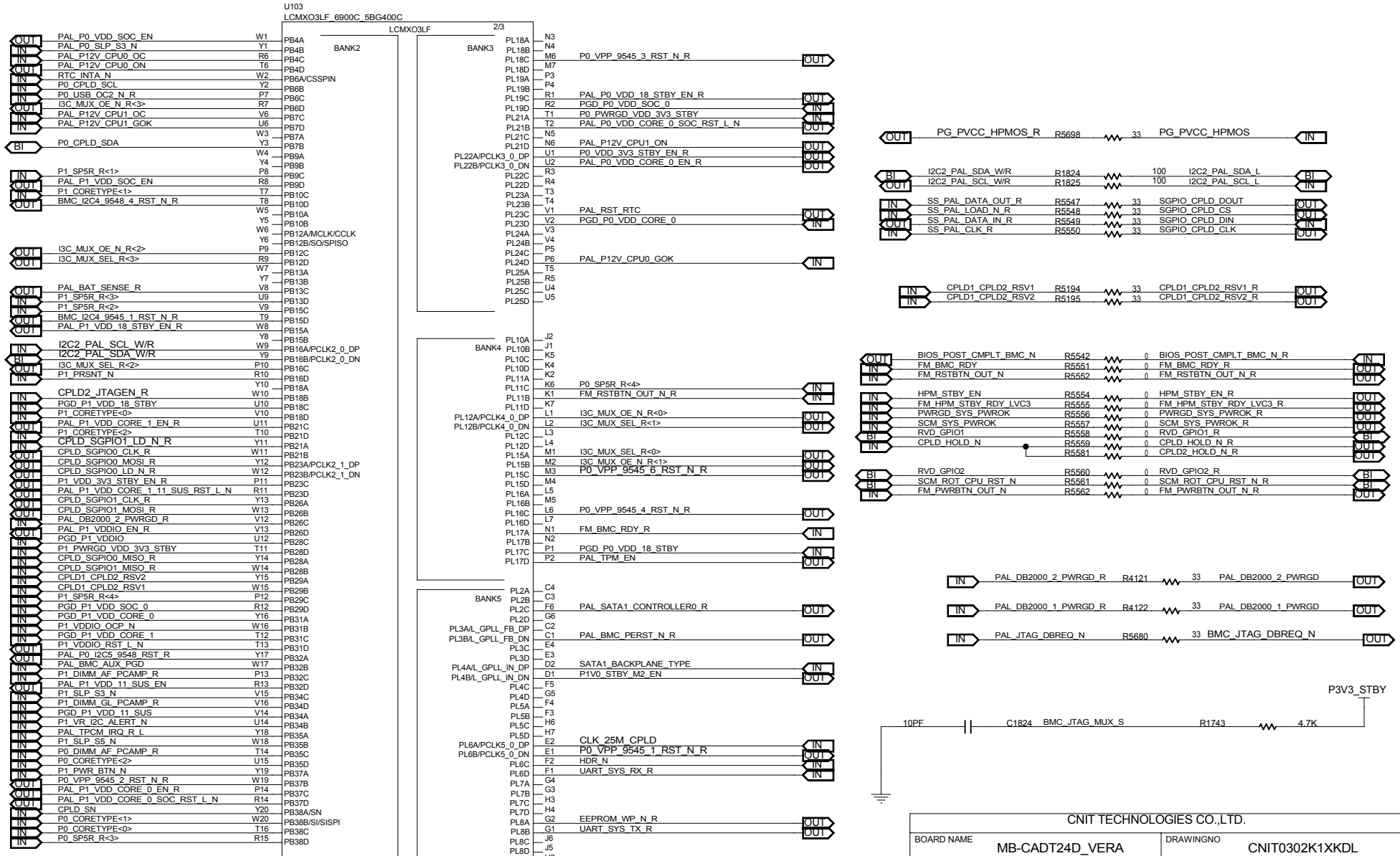

MODULE=---

FUNCTION=---

CNIT TECHNOLOGIES CO.,LTD.				
BOARD NAME MB-CADT24D_VERA			DRAWINGNO CNIT0302K1XKDL	
DESIGNED	yujianjiang00259	DATE <DATE_DN>	SHEET 177 OF 200	REV
REVIEWED	<REVIEWED>	DATE <DATE_RW>	Mon Sep 15 19:50:44 2025	

THIS DOCUMENT AND THE TECHNICAL DATA DISCLOSED ARE PROPRIETARY TO CNIT TECHNOLOGIES CO., LTD. AND SHALL NOT BE DUPLICATED USED RELEASED OR DISCLOSED WITHOUT EXPRESSING WRITTEN PERMISSION.

CPLD_3

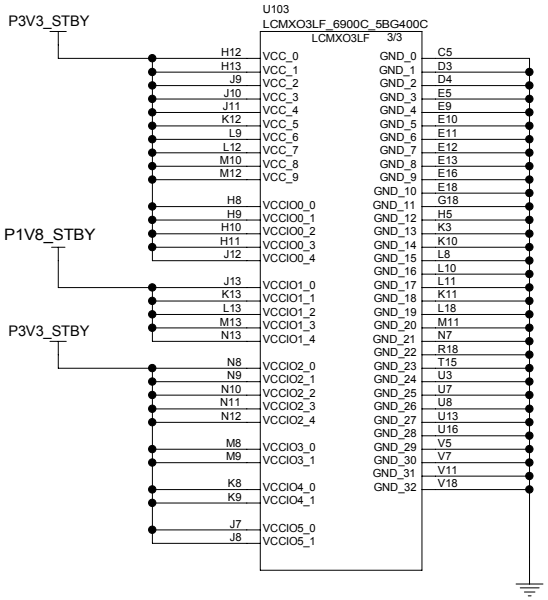

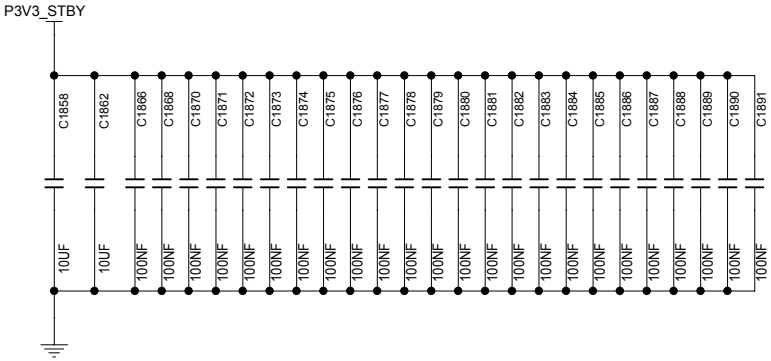

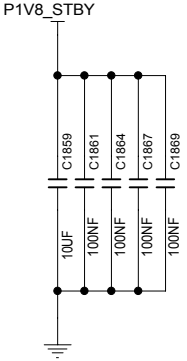

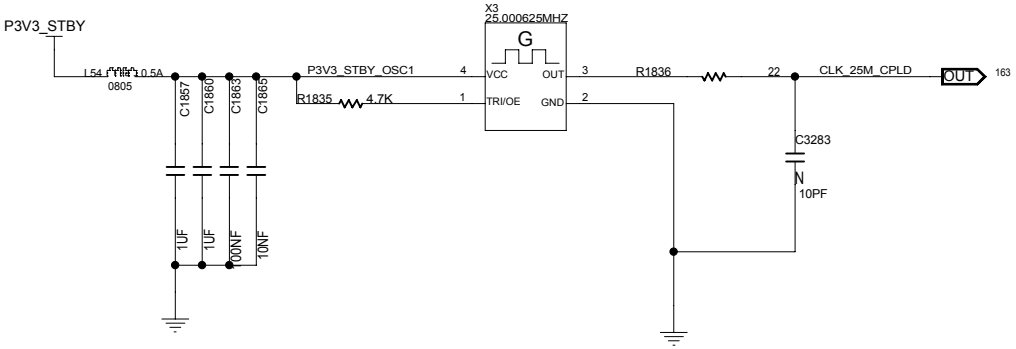

MODULE=---

FUNCTION=---

CNIT TECHNOLOGIES CO.,LTD.				
BOARD NAME MB-CADT24D_VERA			DRAWINGNO CNIT0302K1XKDL	
DESIGNED	yujianjiang00259	DATE <DATE_DN>	SHEET 178 OF 200	REV
REVIEWED	<REVIEWED>	DATE <DATE_RW>	Wed Sep 03 18:49:13 2025	

THIS DOCUMENT AND THE TECHNICAL DATA DISCLOSED ARE PROPRIETARY TO CNIT TECHNOLOGIES CO., LTD. AND SHALL NOT BE DUPLICATED USED RELEASED OR DISCLOSED WITHOUT EXPRESSING WRITTEN PERMISSION.

162	IN	PAL_P0_PRSENT_HDT	R2507	33	PAL_P0_PRSENT_HDT_R	OUT	150	151			
162	IN	PAL_P1_PRSENT_HDT	R2508	33	PAL_P1_PRSENT_HDT_R	OUT	150	151			
162	IN	P0_KBRST_N	R2473	33	P0_KBRST_R_N	OUT	31				
162	OUT	P0_SLP_S5_N	R2474	33	P0_SLP_S5_R_N	IN	32				
162	OUT	P0_SLP_S3_N	R2475	33	P0_SLP_S3_R_N	IN	32				
32 162	IN	P0_PWR_BTN_R_N	R2476	33	P0_PWR_BTN_N	OUT	32				
162	IN	P0_SYS_RESET_R_N	R2477	33	P0_SYS_RESET_N	OUT	34	32			
162	IN	P0_RSMRST_N	R3223	33	P0_RSMRST_R_N	OUT	32				
162	IN	P0_PWR_GOOD	R3224	33	P0_PWR_GOOD_R	OUT	32				
162	IN	P0_NMI_SYNC_FLOOD_N	R3225	33	P0_NMI_SYNC_FLOOD_R_N	OUT	32	33			
162	OUT	P0_SMERR_N	R3226	33	P0_SMERR_R_N	IN	32				
162	OUT	P0_RESET_N	R3227	33	P0_RESET_R_N	IN	32				
162	OUT	P0_PWROK	R3228	33	P0_PWROK_R	IN	32				
32 162	OUT	P0_PWRGD_OUT	R3229	33	P0_PWRGD_OUT_R	IN	32				
162	OUT	P0_PCIE_RST_N<0>	R2487	33	P0_PCIE_RST_R_N<0>	IN	32				
162	OUT	P0_PCIE_RST_N<1>	R2488	33	P0_PCIE_RST_R_N<1>	IN	32				
162	OUT	P0_PRSNT_N	R2489	33	P0_PRSNT_R_N	IN	33				
162	OUT	P0_SP5R_R<1>	R2490	33	P0_SP5R<1>	IN	33				
162	OUT	P0_SP5R_R<2>	R2491	33	P0_SP5R<2>	IN	33				
162	OUT	P0_SP5R_R<3>	R2492	33	P0_SP5R<3>	IN	33				
162	OUT	P0_SP5R_R<4>	R3230	33	P0_SP5R<4>	IN	33				
162	OUT	P0_I3C_APML_ALERT_N	R3231	33	P0_I3C_APML_ALERT_R_N	IN	33				
162	IN	P0_PROCHOT_N	R3232	33	P0_PROCHOT_R_N	OUT	33				
162	OUT	P0_THERMTRIP_N	R3233	33	P0_THERMTRIP_R_N	IN	33				
162	BI	P0_XTRIG_N<4>	R3234	33	P0_XTRIG_R_N<4>	BI	33	58			
162	BI	P0_XTRIG_N<5>	R3235	33	P0_XTRIG_R_N<5>	BI	33	58	147		
162	BI	P0_XTRIG_N<6>	R3236	33	P0_XTRIG_R_N<6>	BI	33	58	147		
162	BI	P0_XTRIG_N<7>	R3237	33	P0_XTRIG_R_N<7>	BI	33	58	147		
162	IN	PAL_TPCM_BIOS_DONE_R_N	R3238	33	PAL_TPCM_BIOS_DONE_N	OUT	33				
162	IN	PAL_TPCM_BMC_DONE_R_N	R2503	33	PAL_TPCM_BMC_DONE_N	OUT	33				
162	OUT	P0_UART_TXD<0>	R2504	33	P0_UART_R_TXD<0>	IN	33				
162	IN	P0_UART_RXD<0>	R2505	33	P0_UART_R_RXD<0>	OUT	33				
162	IN	P0_PCIE_WAKE_N_R	R2654	33	P0_PCIE_WAKE_N	OUT	32				
162	IN	P1_PCIE_WAKE_N_R	R3405	33	P1_PCIE_WAKE_N	OUT	32	57			

162	IN	P1_KBRST_N	R3239	33	P1_KBRST_R_N	OUT	56				
162	IN	P1_SYS_RESET_N	R2513	33	P1_SYS_RESET_R_N	OUT	57				
162	IN	P1_RSMRST_N	R2514	33	P1_RSMRST_R_N	OUT	57				
162	IN	P1_PWR_GOOD	R2515	33	P1_PWR_GOOD_R	OUT	57				
162	IN	P1_NMI_SYNC_FLOOD_N	R3241	33	P1_NMI_SYNC_FLOOD_R_N	OUT	57	58			
162	OUT	P1_SMERR_N	R3242	33	P1_SMERR_R_N	IN	57				
162	OUT	P1_RESET_N	R3243	33	P1_RESET_R_N	IN	32	57			
162	OUT	P1_PWROK	R3244	33	P1_PWROK_R	IN	32	57			
57 162	OUT	P1_PWRGD_OUT	R3245	33	P1_PWRGD_OUT_R	IN	57				
162	OUT	P1_PCIE_RST_N<0>	R3246	33	P1_PCIE_RST_R_N<0>	IN	57				
162	OUT	P1_PCIE_RST_N<1>	R3247	33	P1_PCIE_RST_R_N<1>	IN	57				
163	OUT	P1_PRSNT_N	R3248	33	P1_PRSNT_R_N	IN	58				
163	OUT	P1_SP5R_R<1>	R5006	33	P1_SP5R<1>	IN	58				
163	OUT	P1_SP5R_R<2>	R5007	33	P1_SP5R<2>	IN	58				
163	OUT	P1_SP5R_R<3>	R5008	33	P1_SP5R<3>	IN	58				
163	OUT	P1_SP5R_R<4>	R3209	33	P1_SP5R<4>	IN	58				
162	OUT	P1_I3C_APML_ALERT_N	R3210	33	P1_I3C_APML_ALERT_R_N	IN	58				
162	IN	P1_PROCHOT_N	R3211	33	P1_PROCHOT_R_N	OUT	58				
162	OUT	P1_THERMTRIP_N	R3297	33	P1_THERMTRIP_R_N	IN	58				
162	OUT	P0_UART_TXD<1>	R2540	33	P0_UART_R_TXD<1>	IN	33	34			
162	IN	P0_UART_RXD<1>	R2541	33	P0_UART_R_RXD<1>	OUT	33				
162	IN	P0_WAFL_STRAP_SEL_R	R3249	33	P0_ESPI_CLK2_STRAP	OUT	34	31			
						OUT	107				
162	IN	HDT_CPU_PWROK	R3144	33	HDT_CPU_PWROK_R	OUT	147				
162	IN	HDT_CPU_RESET_N	R3145	33	HDT_CPU_RESET_R_N	OUT	147				
IN		PAL_BMC_PERST_N_R	R5570	33	CPU0_PCIE_RST	OUT					
IN		FM_CPU_SMERR_LVC3_N_R	R5571	33	FM_CPU_SMERR_LVC3_N	OUT					

163	OUT	UART_SYS_RX_R	R3025	33	UART_CPLD_RX
163	IN	UART_SYS_TX_R	R5847	33	UART_CPLD_TX

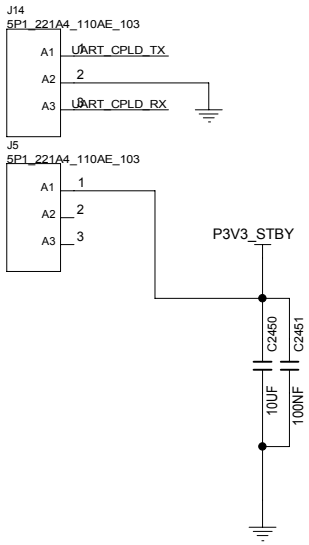

MODULE=---

FUNCTION=---

CNIT TECHNOLOGIES CO.,LTD.				
BOARD NAME MB-CADT24D_VERA			DRAWINGNO CNIT0302K1XKDL	
DESIGNED	yujianjiang00259	DATE <DATE_DN>	SHEET 179 OF 200	REV
REVIEWED	<REVIEWED>	DATE <DATE_RW>	Mon Sep 15 19:50:44 2025	

THIS DOCUMENT AND THE TECHNICAL DATA DISCLOSED ARE PROPRIETARY TO CNIT TECHNOLOGIES CO., LTD. AND SHALL NOT BE DUPLICATED USED RELEASED OR DISCLOSED WITHOUT EXPRESSING WRITTEN PERMISSION.

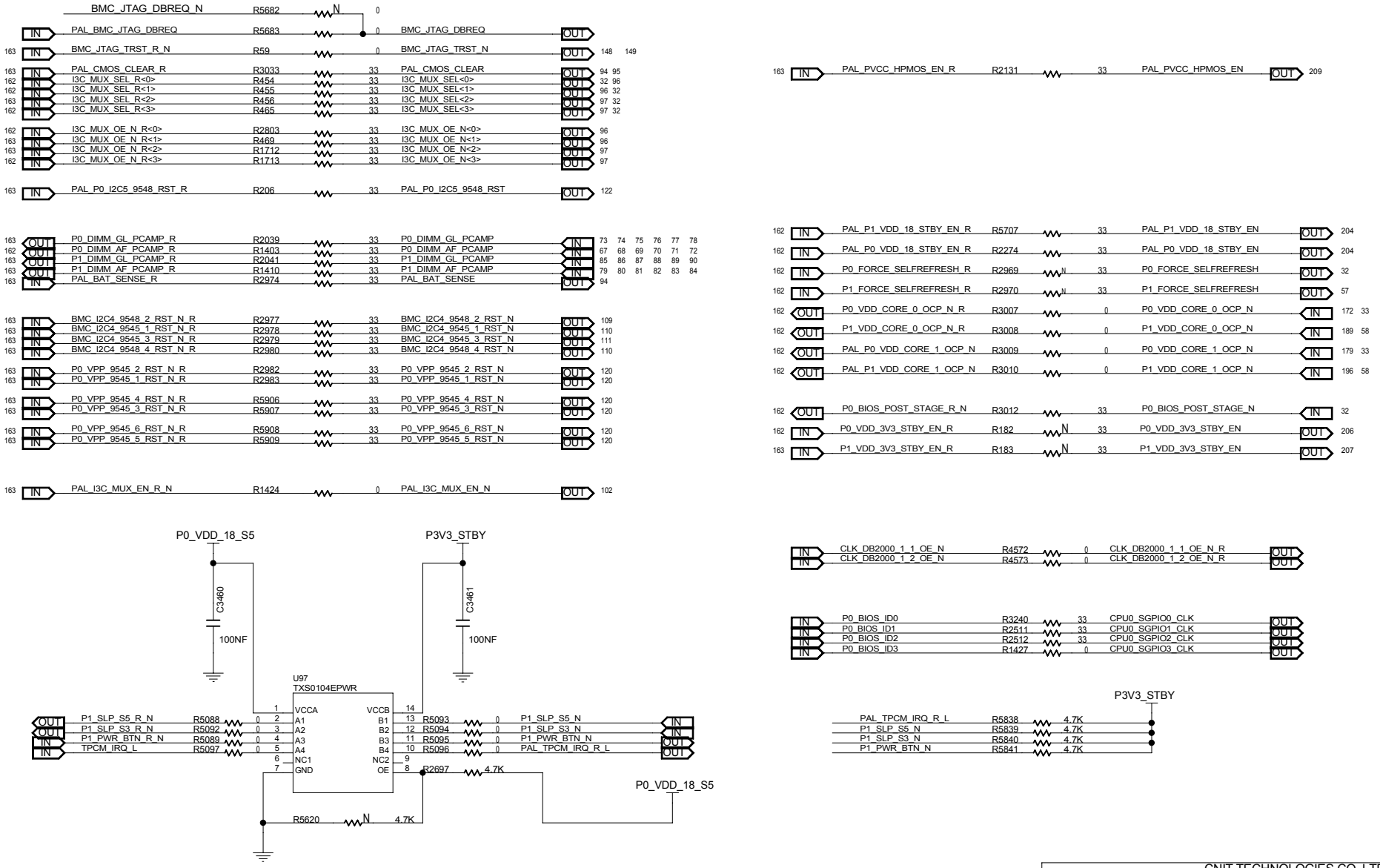

MODULE=---

FUNCTION=---

CNIT TECHNOLOGIES CO.,LTD.				
BOARD NAME MB-CADT24D_VERA			DRAWINGNO CNIT0302K1XKDL	
DESIGNED	yujianjiang00259	DATE <DATE_DN>	SHEET 180 OF 200	REV
REVIEWED	<REVIEWED>	DATE <DATE_RW>	Sat Sep 13 17:36:43 2025	

THIS DOCUMENT AND THE TECHNICAL DATA DISCLOSED ARE PROPRIETARY TO CNIT TECHNOLOGIES CO., LTD. AND SHALL NOT BE DUPLICATED USED RELEASED OR DISCLOSED WITHOUT EXPRESSING WRITTEN PERMISSION.

BOARD ID

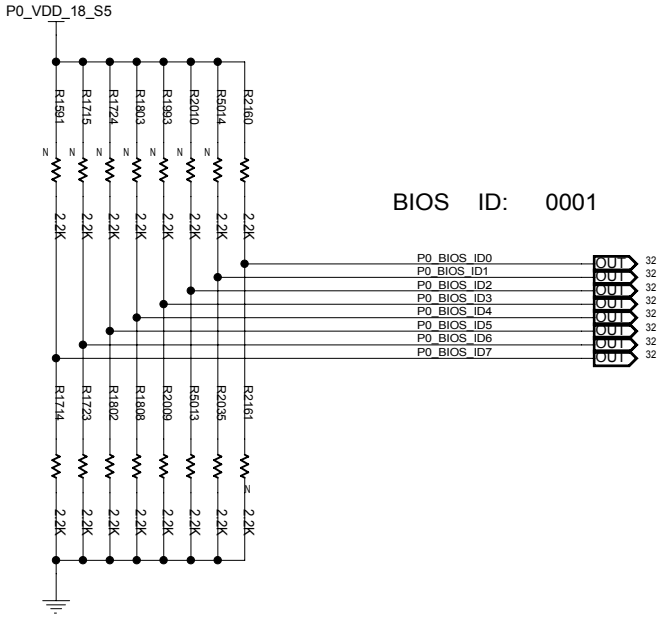

BIOS ID: 0001

VENDOR ID 0X08: 0000_1000
VENDOR ID[7:0]: FIXED BY CPLD CODE

PLATFORM ID 0X00: INTEL
PLATFORM ID 0X01: AMD
PLATFORM ID 0X02: M
PLATFORM ID 0X03: BOX
PLATFORM ID[7:0]: FIXED BY CPLD CODE

MODULE=---
FUNCTION=---

CNIT TECHNOLOGIES CO.,LTD.				
BOARD NAME MB-CADT24D_VERA			DRAWINGNO CNIT0302K1XKDL	
DESIGNED	yujianjiang00259	DATE <DATE_DN>	SHEET 181 OF 200	REV
REVIEWED	<REVIEWED>	DATE <DATE_RW>	Mon Sep 01 14:15:23 2025	

THIS DOCUMENT AND THE TECHNICAL DATA DISCLOSED ARE PROPRIETARY TO CNIT TECHNOLOGIES CO., LTD. AND SHALL NOT BE DUPLICATED USED RELEASED OR DISCLOSED WITHOUT EXPRESSING WRITTEN PERMISSION.

ADC

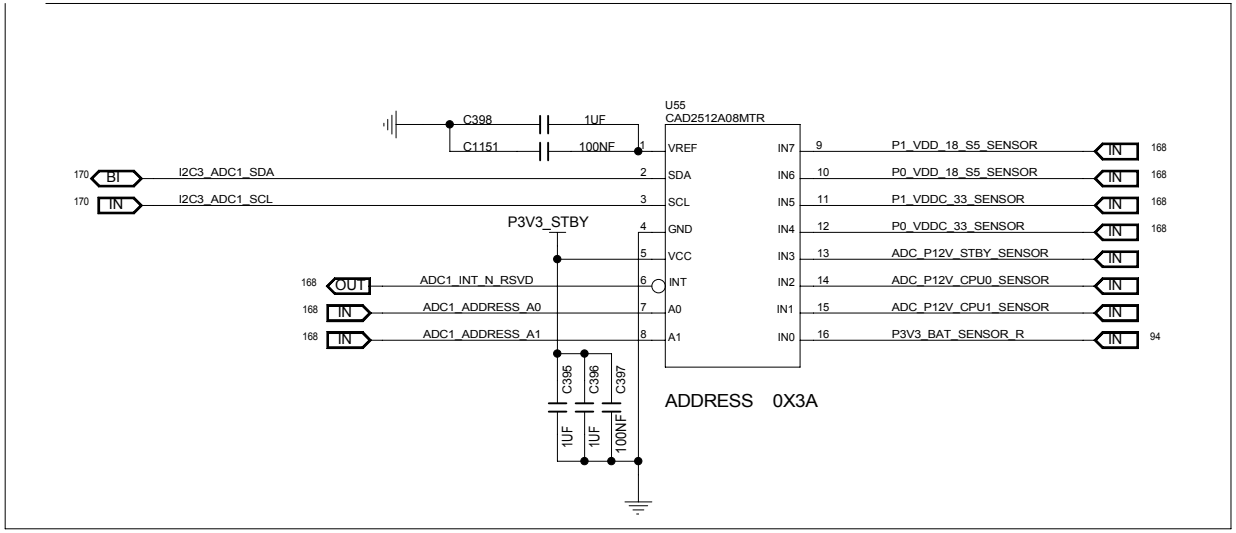

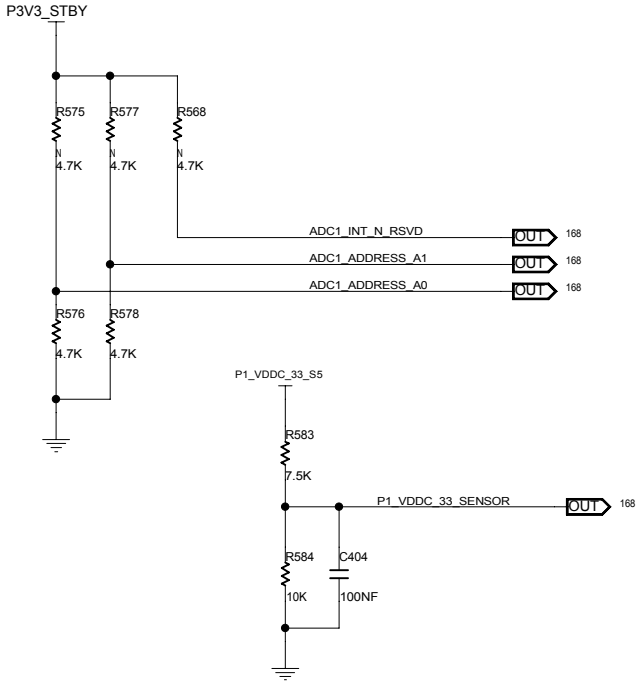

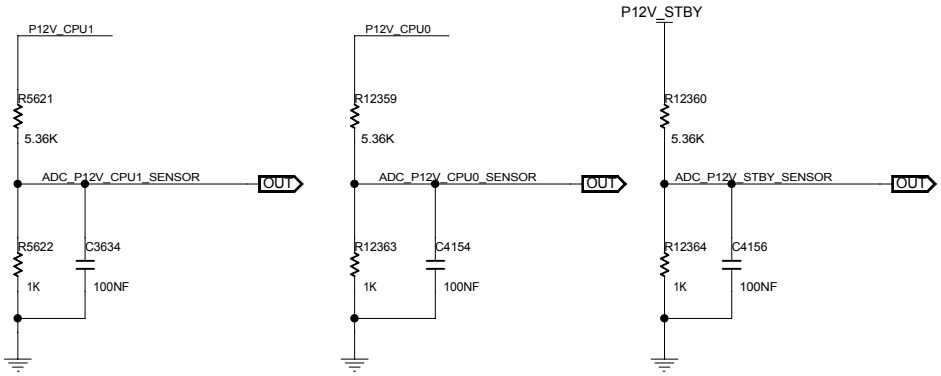

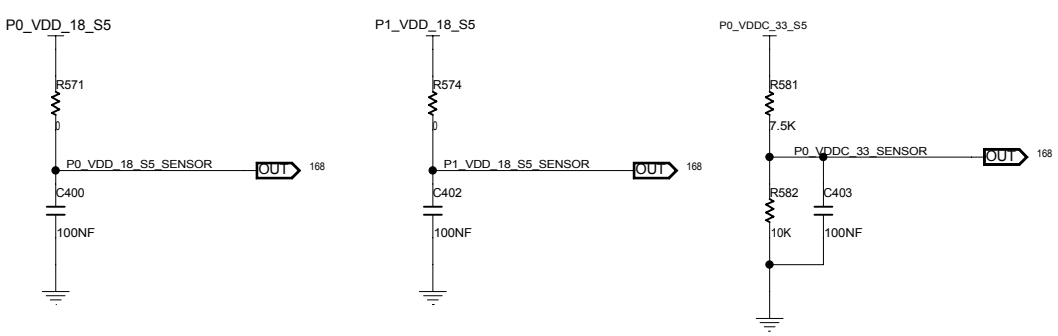

MODULE=---
FUNCTION=---

CNIT TECHNOLOGIES CO.,LTD.				
BOARD NAME MB-CADT24D_VERA			DRAWINGNO CNIT0302K1XKDL	
DESIGNED	yujianjiang00259	DATE <DATE_DN>	SHEET 182 OF 200	REV
REVIEWED	<REVIEWED>	DATE <DATE_RW>	Mon Sep 15 20:02:25 2025	

THIS DOCUMENT AND THE TECHNICAL DATA DISCLOSED ARE PROPRIETARY TO CNIT TECHNOLOGIES CO., LTD. AND SHALL NOT BE DUPLICATED USED RELEASED OR DISCLOSED WITHOUT EXPRESSING WRITTEN PERMISSION.

ADC

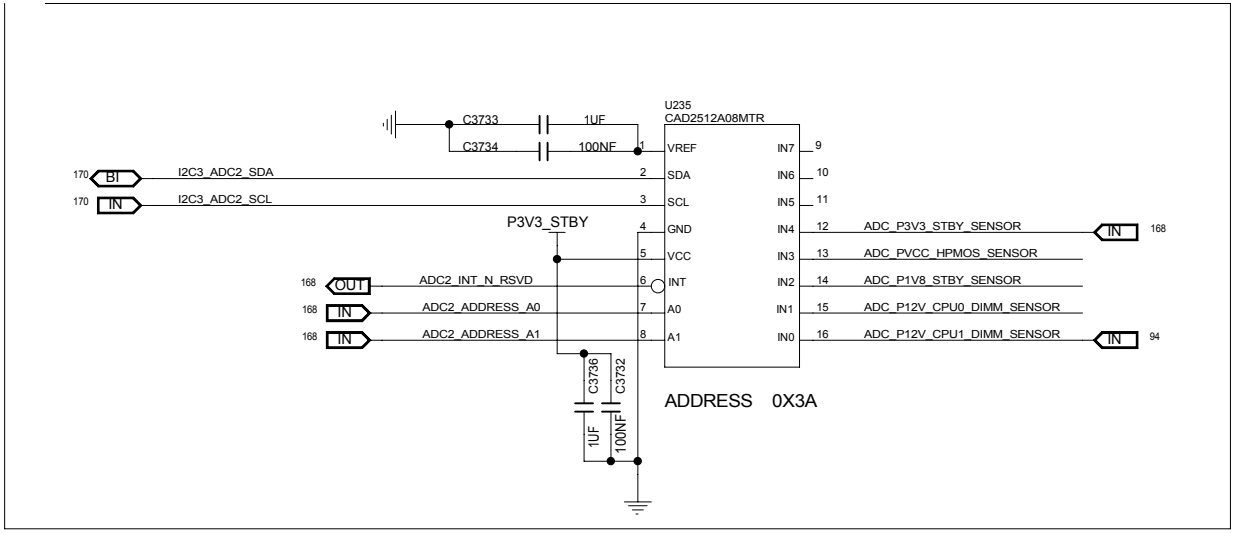

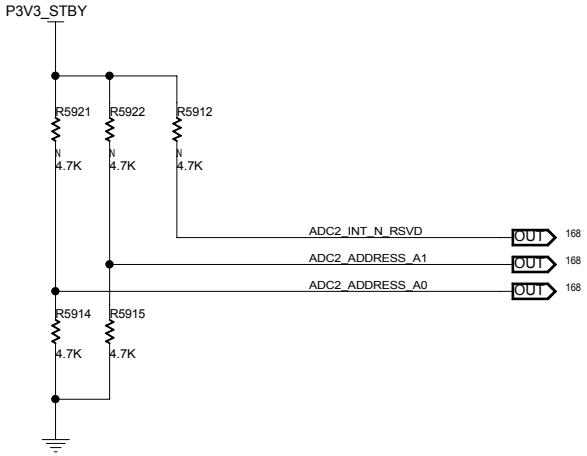

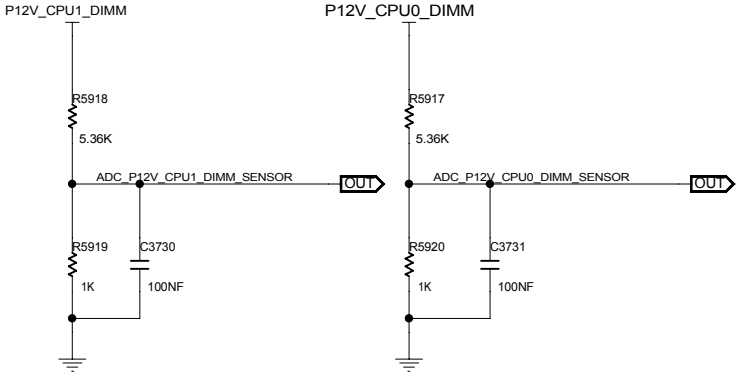

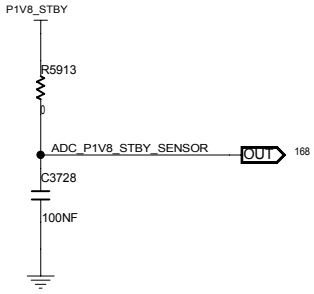

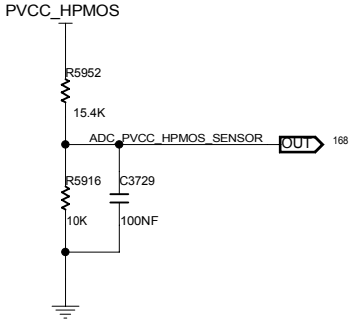

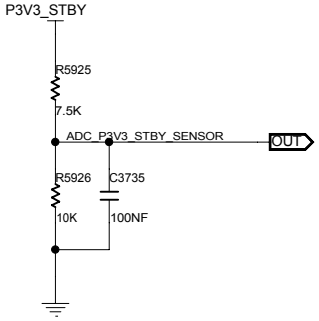

MODULE=---

FUNCTION=---

CNIT TECHNOLOGIES CO.,LTD.				
BOARD NAME MB-CADT24D_VERA			DRAWINGNO CNIT0302K1XKDL	
DESIGNED	yujianjiang00259	DATE <DATE_DN>	SHEET 183 OF 200	REV
REVIEWED	<REVIEWED>	DATE <DATE_RW>	Mon Sep 01 14:15:28 2025	

THIS DOCUMENT AND THE TECHNICAL DATA DISCLOSED ARE PROPRIETARY TO CNIT TECHNOLOGIES CO., LTD. AND SHALL NOT BE DUPLICATED USED RELEASED OR DISCLOSED WITHOUT EXPRESSING WRITTEN PERMISSION.

MECHANICAL

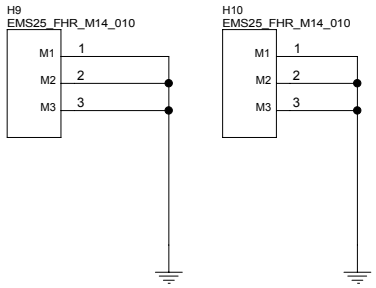

VR HEATSINK CPU0

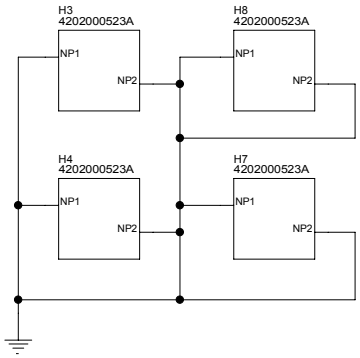

VR HEATSINK CPU1

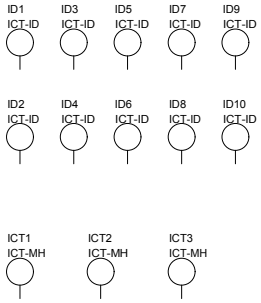

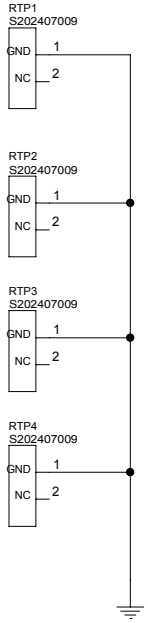

SCOKET BP

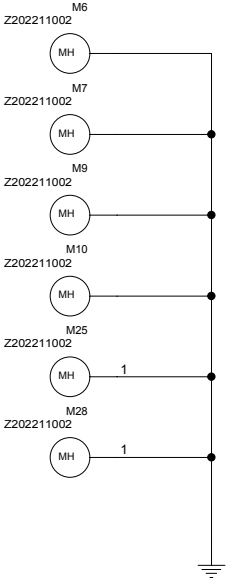

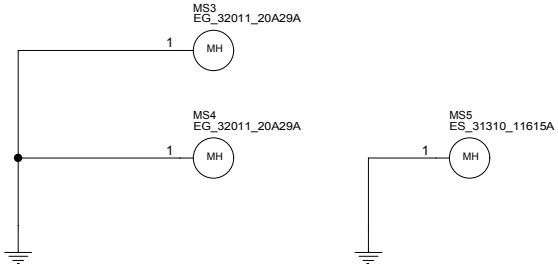

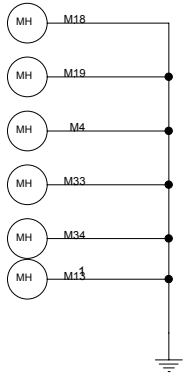

MODULE=---

FUNCTION=---

CNIT TECHNOLOGIES CO.,LTD.				
BOARD NAME MB-CADT24D_VERA			DRAWINGNO CNIT0302K1XKDL	
DESIGNED	yujianjiang00259	DATE <DATE_DN>	SHEET 184 OF 200	REV
REVIEWED	<REVIEWED>	DATE <DATE_RW>	Mon Sep 15 11:02:48 2025	

THIS DOCUMENT AND THE TECHNICAL DATA DISCLOSED ARE PROPRIETARY TO CNIT TECHNOLOGIES CO., LTD. AND SHALL NOT BE DUPLICATED USED RELEASED OR DISCLOSED WITHOUT EXPRESSING WRITTEN PERMISSION.

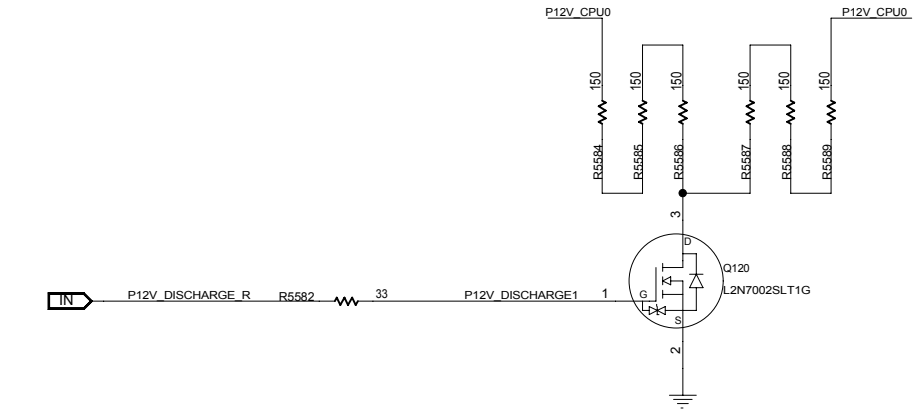

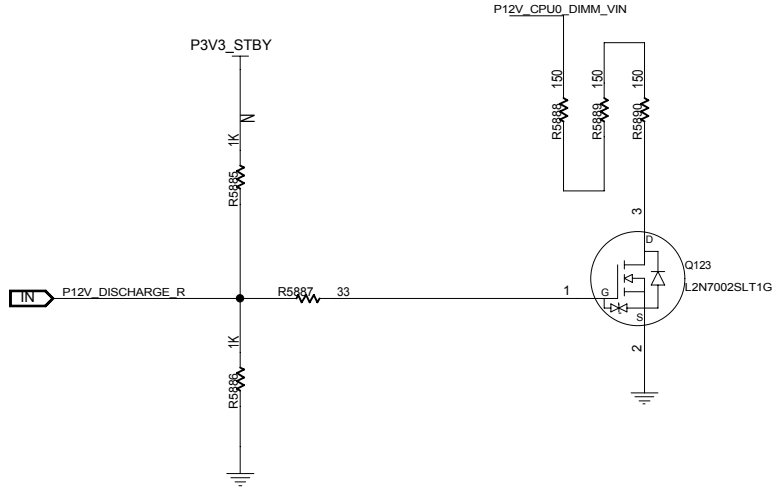

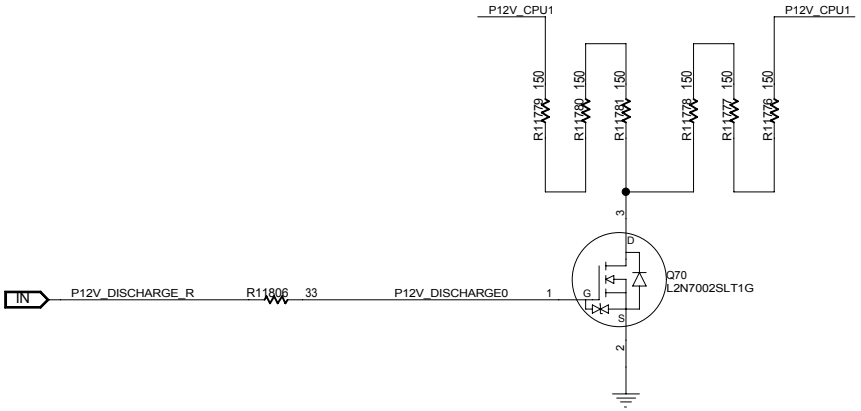

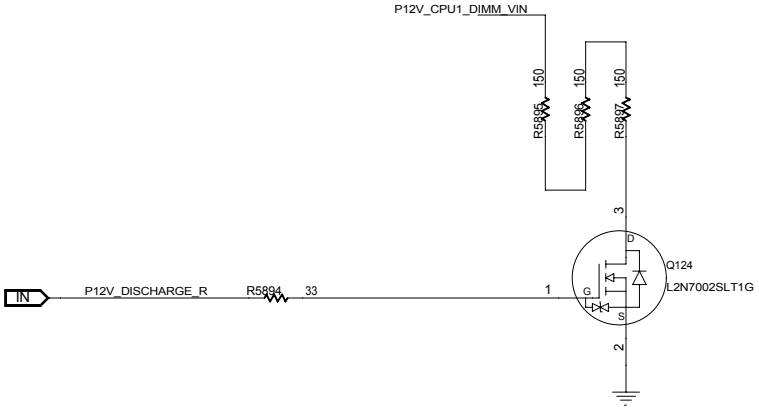

MODULE=---
FUNCTION=---

CNIT TECHNOLOGIES CO.,LTD.				
BOARD NAME MB-CADT24D_VERA			DRAWINGNO CNIT0302K1XKDL	
DESIGNED	yujianjiang00259	DATE <DATE_DN>	SHEET 185 OF 200	REV
REVIEWED	<REVIEWED>	DATE <DATE_RW>	Mon Sep 01 14:15:35 2025	

THIS DOCUMENT AND THE TECHNICAL DATA DISCLOSED ARE PROPRIETARY TO CNIT TECHNOLOGIES CO., LTD. AND SHALL NOT BE DUPLICATED USED RELEASED OR DISCLOSED WITHOUT EXPRESSING WRITTEN PERMISSION.

TPM

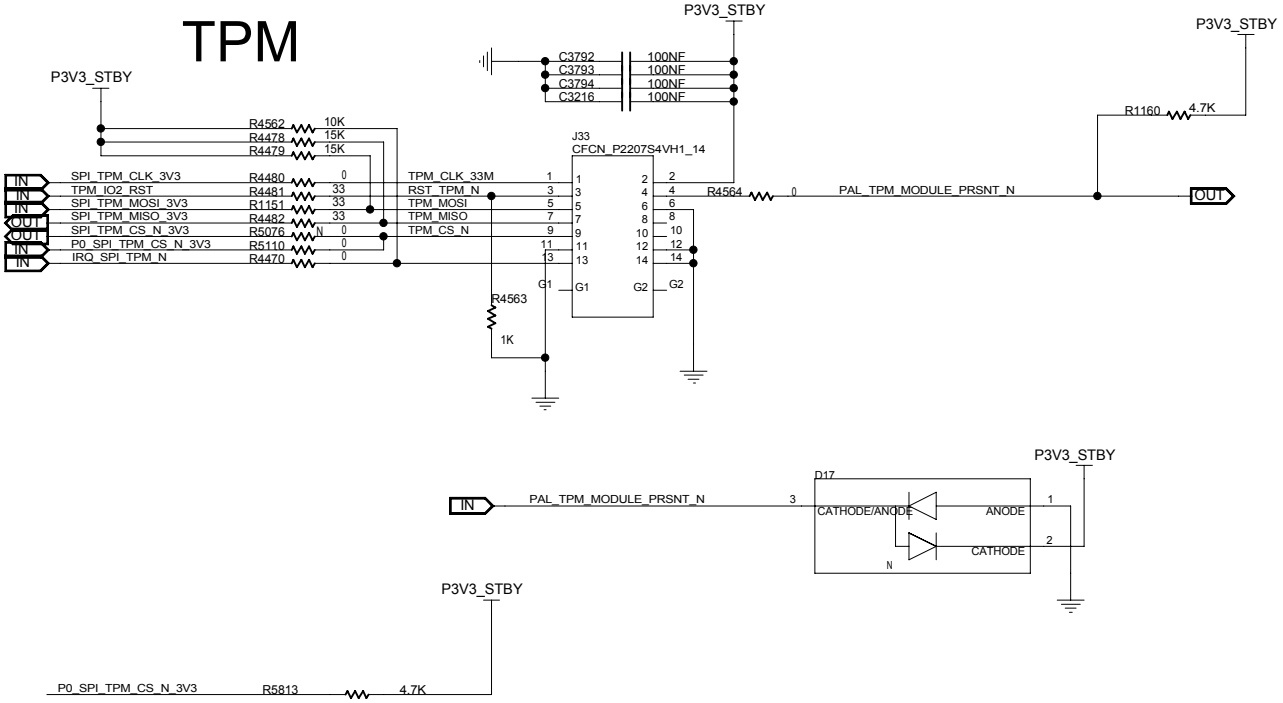

MODULE=---
FUNCTION=---

CNIT TECHNOLOGIES CO.,LTD.				
BOARD NAME MB-CADT24D_VERA			DRAWINGNO CNIT0302K1XKDL	
DESIGNED	yujianjiang00259	DATE <DATE_DN>	SHEET 186 OF 200	REV
REVIEWED	<REVIEWED>	DATE <DATE_RW>	Mon Sep 01 14:15:38 2025	

THIS DOCUMENT AND THE TECHNICAL DATA DISCLOSED ARE PROPRIETARY TO CNIT TECHNOLOGIES CO., LTD. AND SHALL NOT BE DUPLICATED USED RELEASED OR DISCLOSED WITHOUT EXPRESSING WRITTEN PERMISSION.

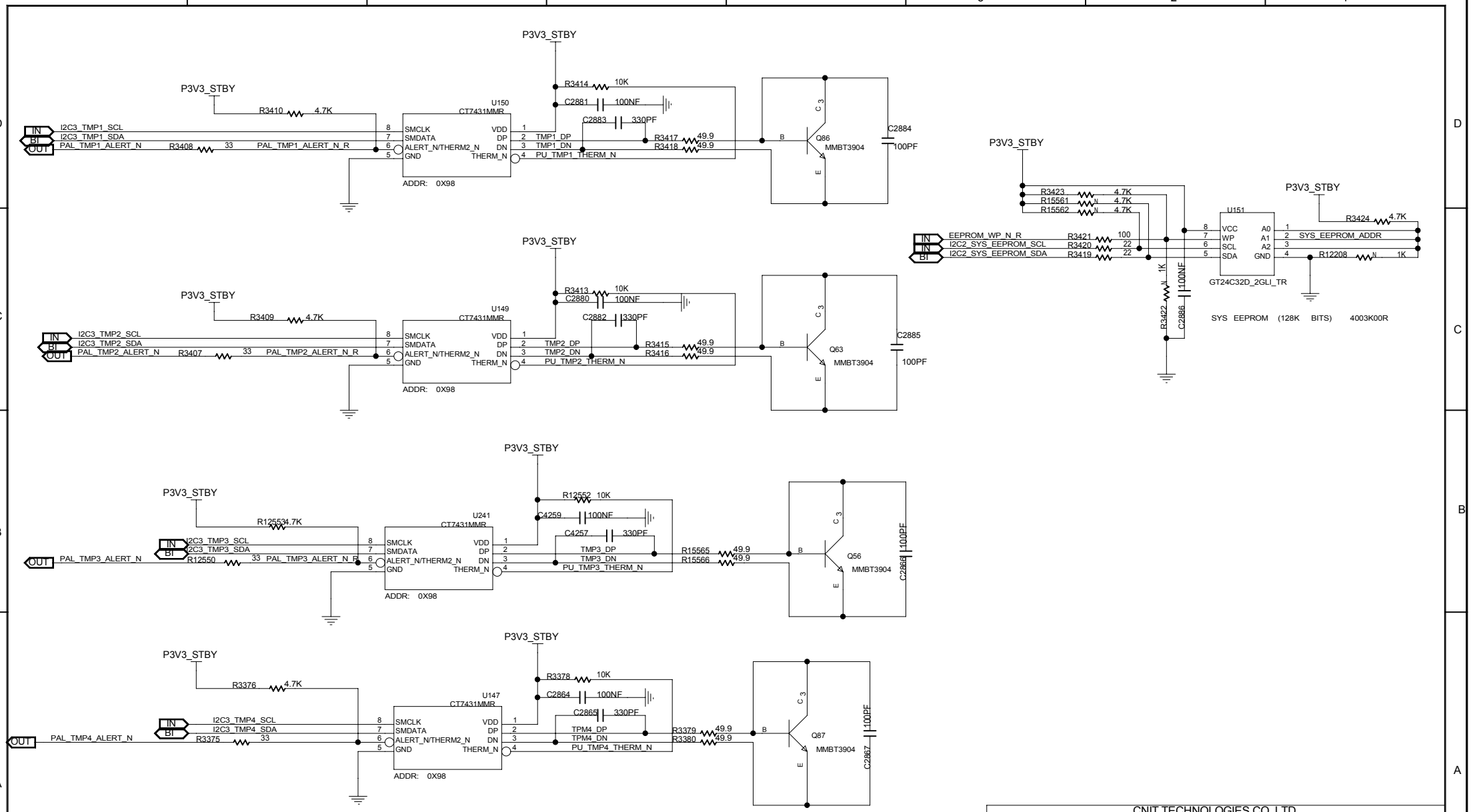

MODULE=---

FUNCTION=---

CNIT TECHNOLOGIES CO.,LTD.				
BOARD NAME MB-CADT24D_VERA			DRAWINGNO CNIT0302K1XKDL	
DESIGNED	yujianjiang00259	DATE <DATE_DN>	SHEET 187 OF 200	REV
REVIEWED	<REVIEWED>	DATE <DATE_RW>	Mon Sep 01 14:15:40 2025	

THIS DOCUMENT AND THE TECHNICAL DATA DISCLOSED ARE PROPRIETARY TO CNIT TECHNOLOGIES CO., LTD. AND SHALL NOT BE DUPLICATED USED RELEASED OR DISCLOSED WITHOUT EXPRESSING WRITTEN PERMISSION.

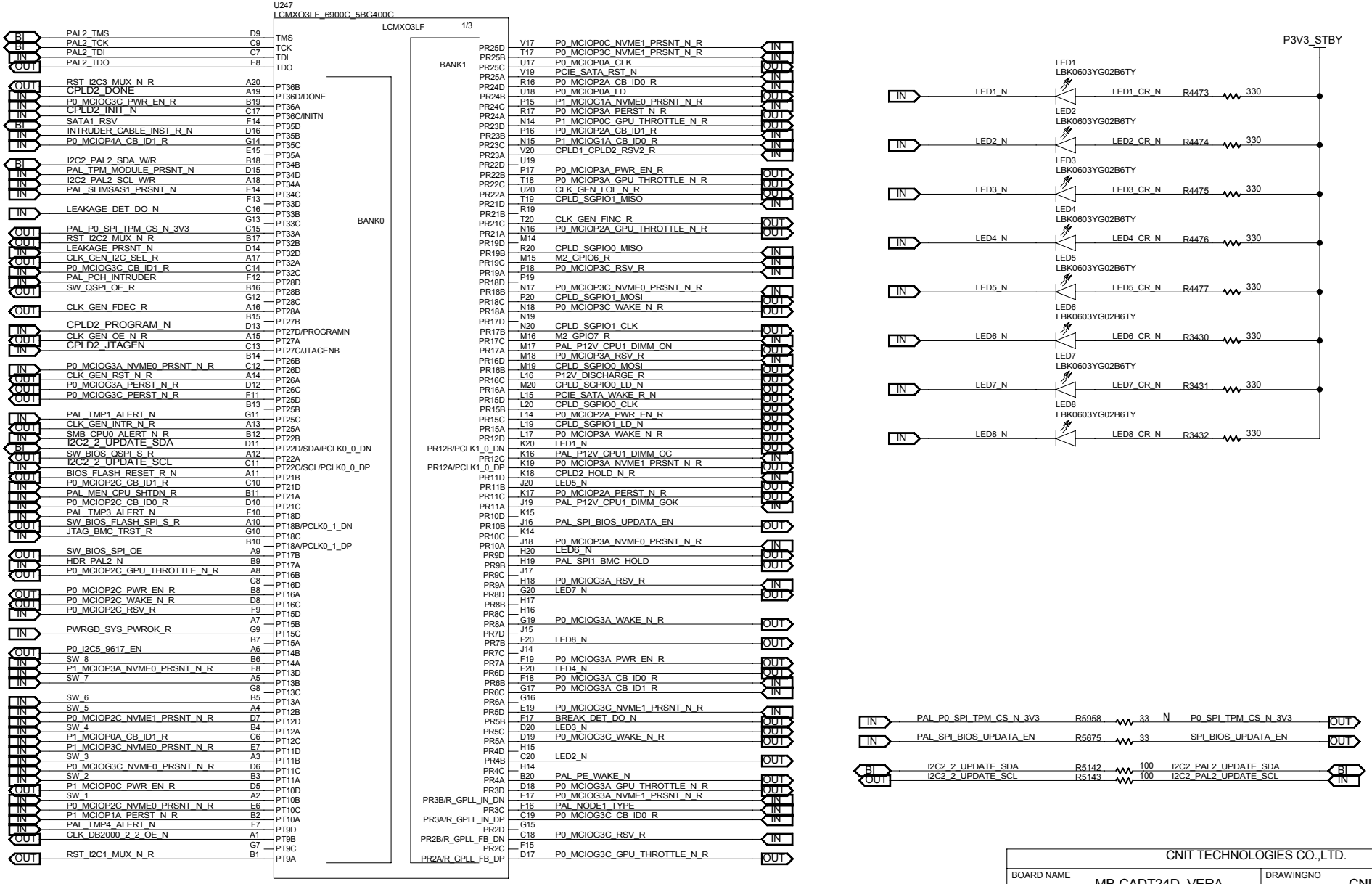

MODULE=---

FUNCTION=---

CNIT TECHNOLOGIES CO.,LTD.				
BOARD NAME MB-CADT24D_VERA			DRAWINGNO CNIT0302K1XKDL	
DESIGNED	yujianjiang00259	DATE <DATE_DN>	SHEET 188 OF 200	REV
REVIEWED	<REVIEWED>	DATE <DATE_RW>	Tue Sep 16 09:02:21 2025	

THIS DOCUMENT AND THE TECHNICAL DATA DISCLOSED ARE PROPRIETARY TO CNIT TECHNOLOGIES CO., LTD. AND SHALL NOT BE DUPLICATED USED RELEASED OR DISCLOSED WITHOUT EXPRESSING WRITTEN PERMISSION.

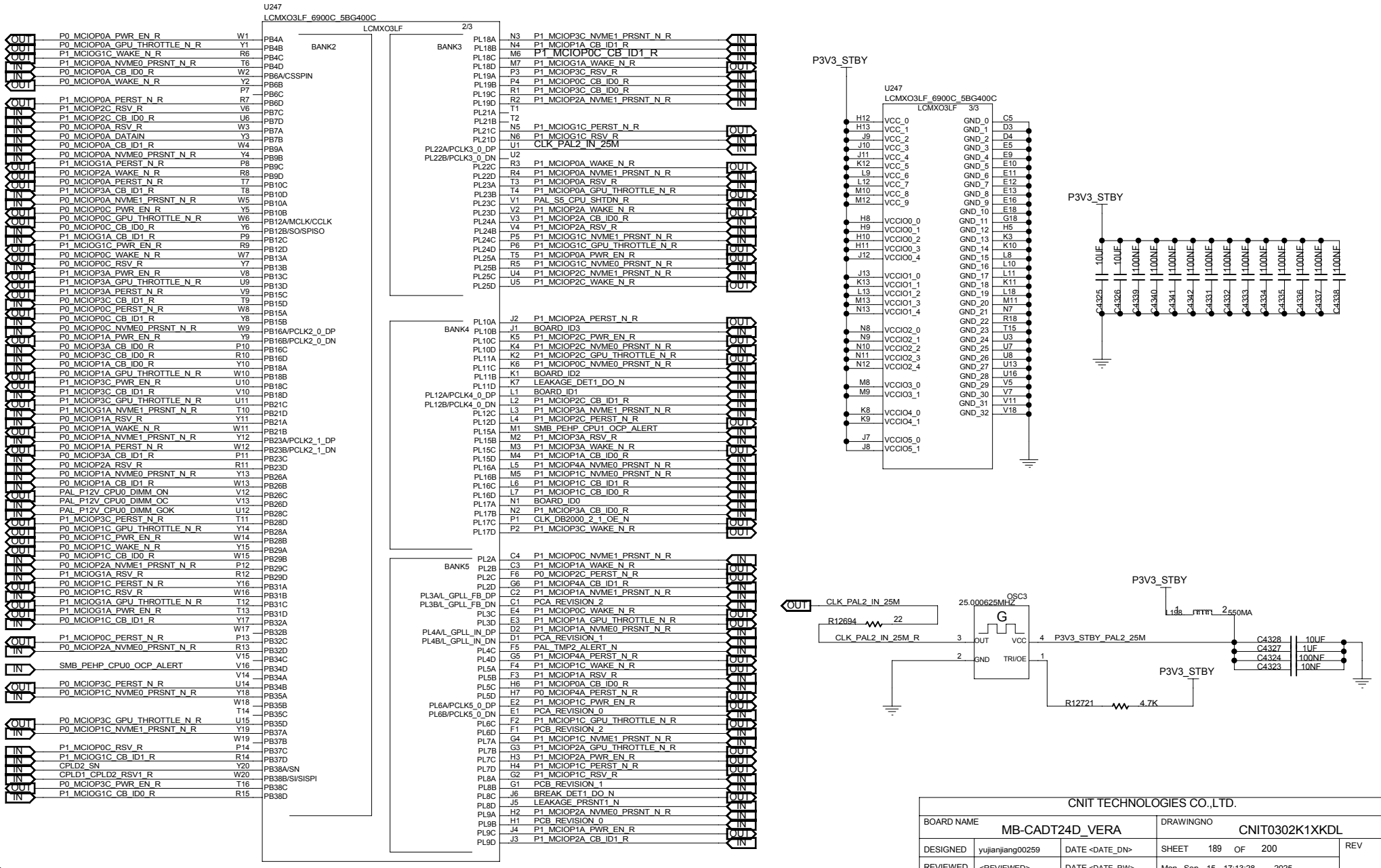

MODULE=---

FUNCTION=---

CNIT TECHNOLOGIES CO.,LTD.				
BOARD NAME MB-CADT24D_VERA			DRAWINGNO CNIT0302K1XKDL	
DESIGNED	yujianjiang00259	DATE <DATE_DN>	SHEET 189 OF 200	REV
REVIEWED	<REVIEWED>	DATE <DATE_RW>	Mon Sep 15 17:13:28 2025	

THIS DOCUMENT AND THE TECHNICAL DATA DISCLOSED ARE PROPRIETARY TO CNIT TECHNOLOGIES CO., LTD. AND SHALL NOT BE DUPLICATED USED RELEASED OR DISCLOSED WITHOUT EXPRESSING WRITTEN PERMISSION.

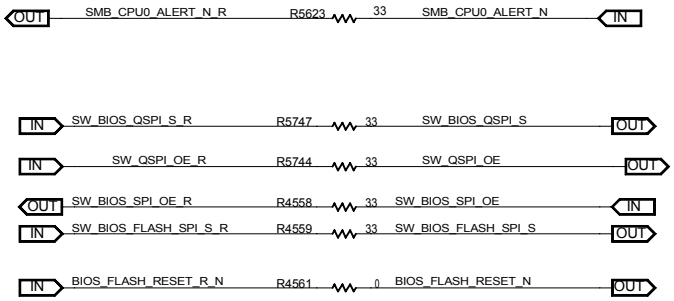

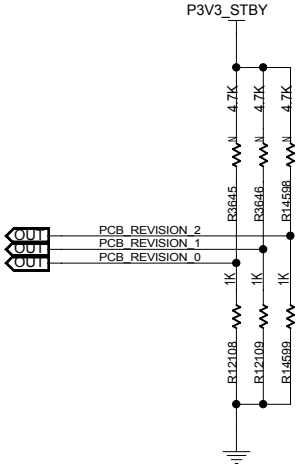

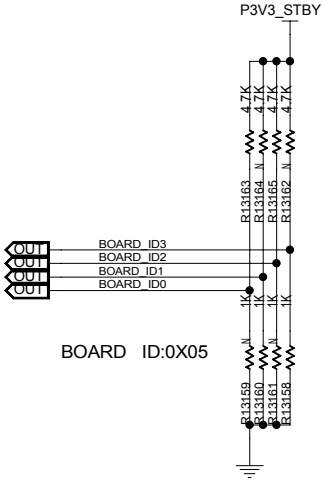

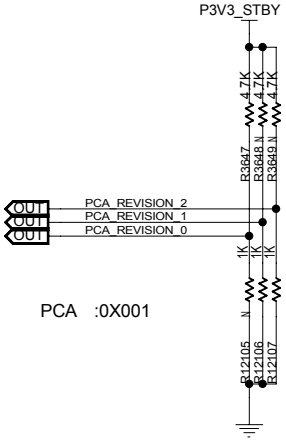

PCB_VER2	PCB_VER1	PCB_VER0	PCB_VER
0	0	0	A
0	0	1	B
0	1	0	C

MODULE=---

FUNCTION=---

CNIT TECHNOLOGIES CO.,LTD.

BOARD NAME	MB-CADT24D_VERA	DRAWINGNO	CNIT0302K1XKDL
DESIGNED	yujianjiang00259	DATE <DATE_DN>	SHEET 190 OF 200
REVIEWED	<REVIEWED>	DATE <DATE_RW>	Mon Sep 15 17:13:28 2025

REV

THIS DOCUMENT AND THE TECHNICAL DATA DISCLOSED ARE PROPRIETARY TO CNIT TECHNOLOGIES CO., LTD. AND SHALL NOT BE DUPLICATED USED RELEASED OR DISCLOSED WITHOUT EXPRESSING WRITTEN PERMISSION.

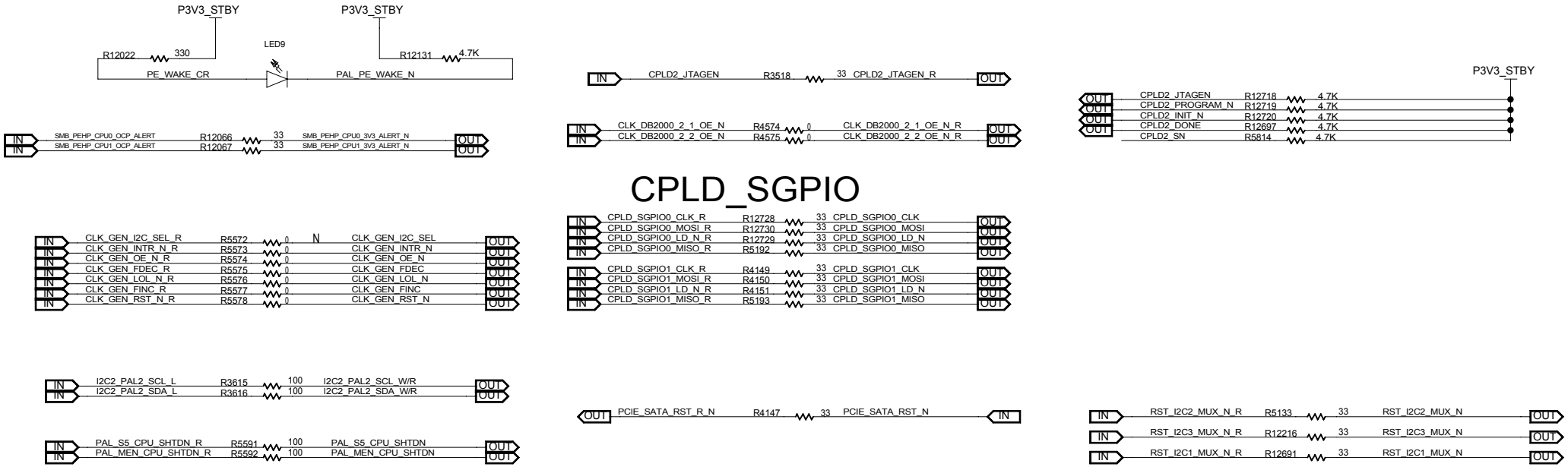

MODULE=---

FUNCTION=---

CNIT TECHNOLOGIES CO.,LTD.				
BOARD NAME MB-CADT24D_VERA			DRAWINGNO CNIT0302K1XKDL	
DESIGNED	yujianjiang00259	DATE <DATE_DN>	SHEET 191 OF 200	REV
REVIEWED	<REVIEWED>	DATE <DATE_RW>	Mon Sep 15 17:13:30 2025	

THIS DOCUMENT AND THE TECHNICAL DATA DISCLOSED ARE PROPRIETARY TO CNIT TECHNOLOGIES CO., LTD. AND SHALL NOT BE DUPLICATED USED RELEASED OR DISCLOSED WITHOUT EXPRESSING WRITTEN PERMISSION.

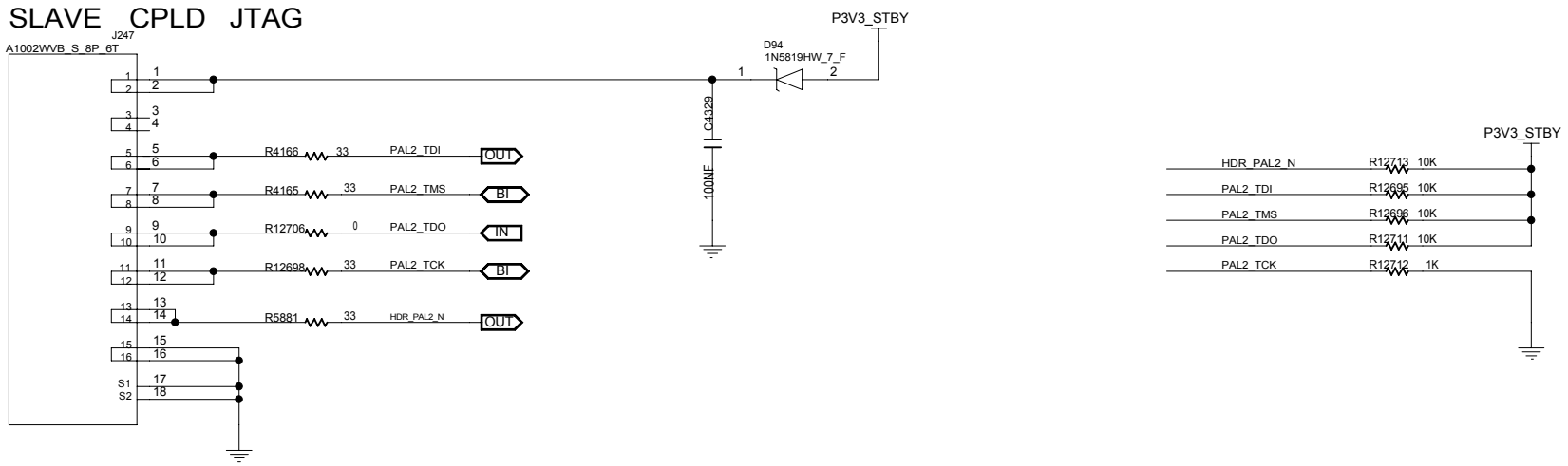

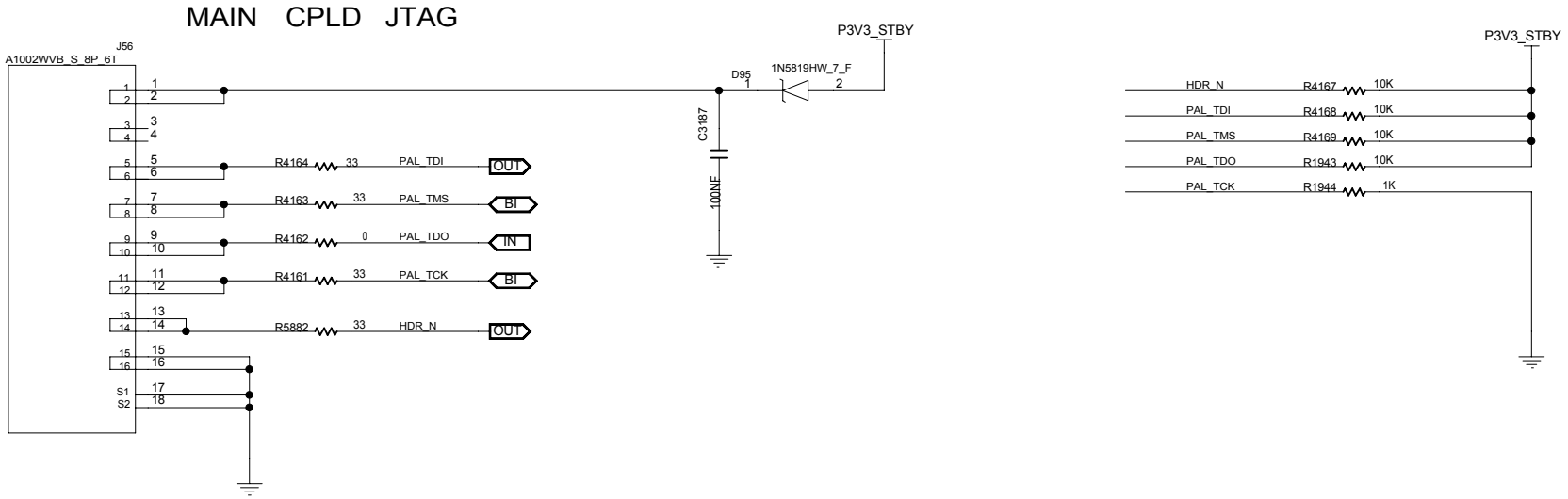

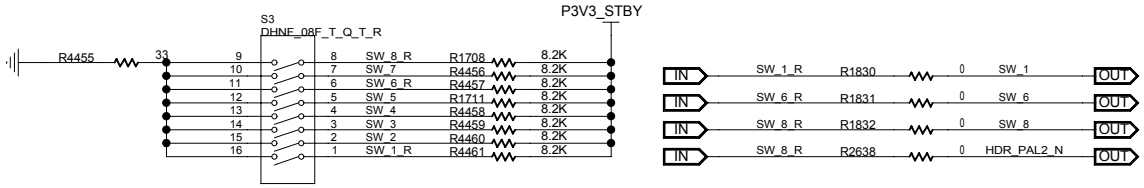

MODULE=---

FUNCTION=---

CNIT TECHNOLOGIES CO.,LTD.				
BOARD NAME MB-CADT24D_VERA			DRAWINGNO CNIT0302K1XKDL	
DESIGNED	yujianjiang00259	DATE <DATE_DN>	SHEET 192 OF 200	REV
REVIEWED	<REVIEWED>	DATE <DATE_RW>	Tue Sep 16 09:02:14 2025	

THIS DOCUMENT AND THE TECHNICAL DATA DISCLOSED ARE PROPRIETARY TO CNIT TECHNOLOGIES CO., LTD. AND SHALL NOT BE DUPLICATED USED RELEASED OR DISCLOSED WITHOUT EXPRESSING WRITTEN PERMISSION.

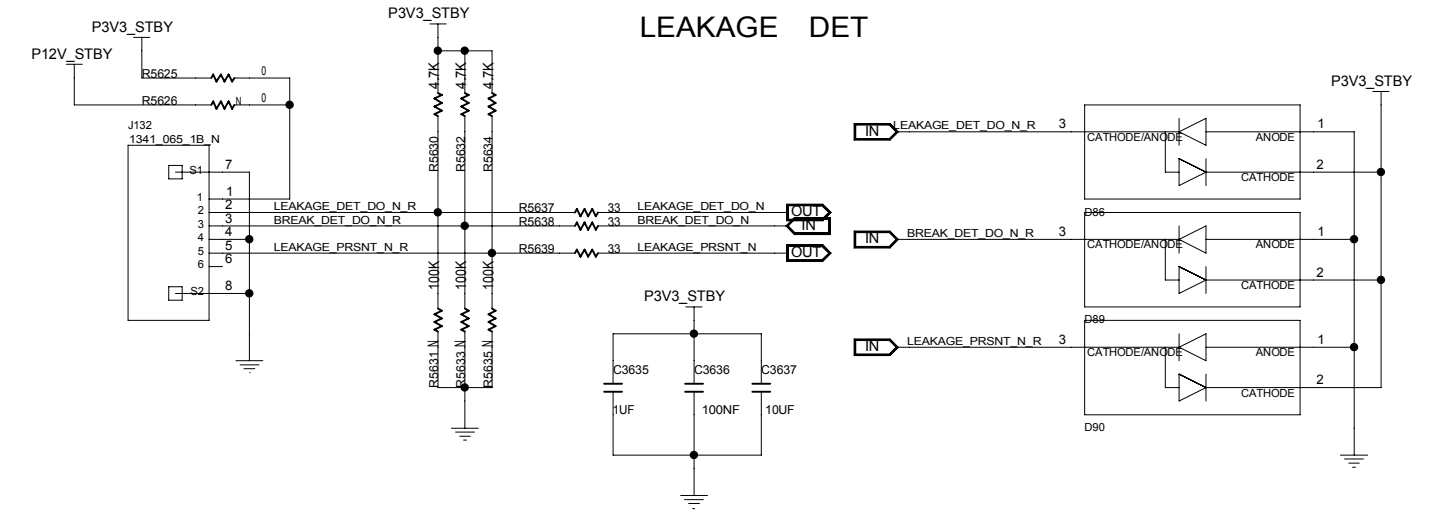

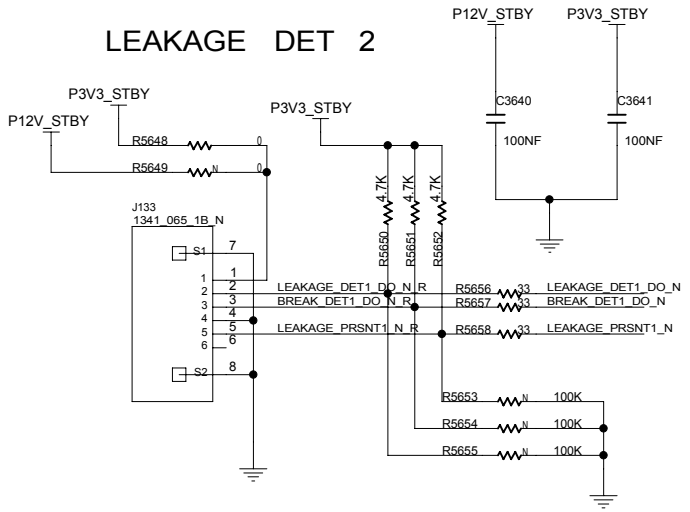

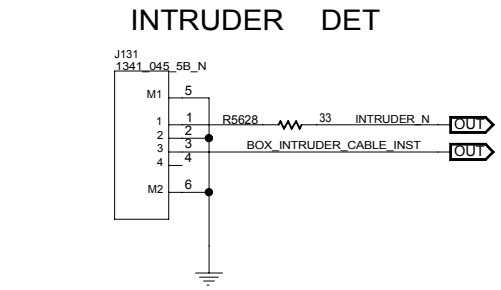

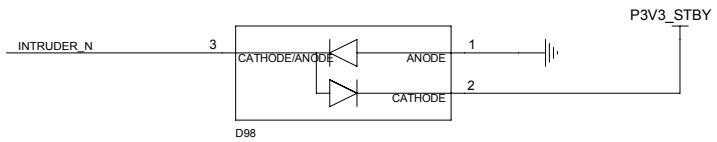

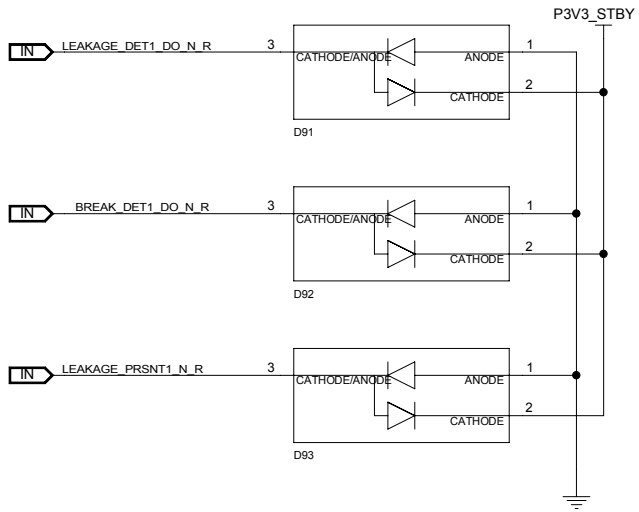

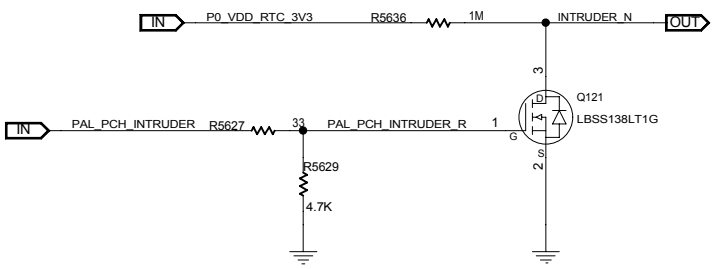

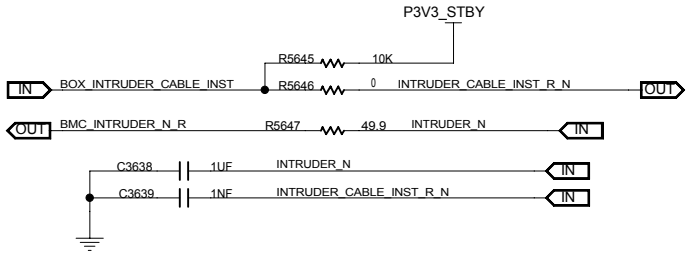

MODULE=---

FUNCTION=---

CNIT TECHNOLOGIES CO.,LTD.				
BOARD NAME	MB-CADT24D_VERA		DRAWINGNO	CNIT0302K1XKDL
DESIGNED	yujianjiang00259	DATE <DATE_DN>	SHEET 193 OF 200	REV
REVIEWED	<REVIEWED>	DATE <DATE_RW>	Mon Sep 15 11:29:37 2025	

THIS DOCUMENT AND THE TECHNICAL DATA DISCLOSED ARE PROPRIETARY TO CNIT TECHNOLOGIES CO., LTD. AND SHALL NOT BE DUPLICATED USED RELEASED OR DISCLOSED WITHOUT EXPRESSING WRITTEN PERMISSION.

SATA_CONTROLLER

4314K03X

88SE9230A1

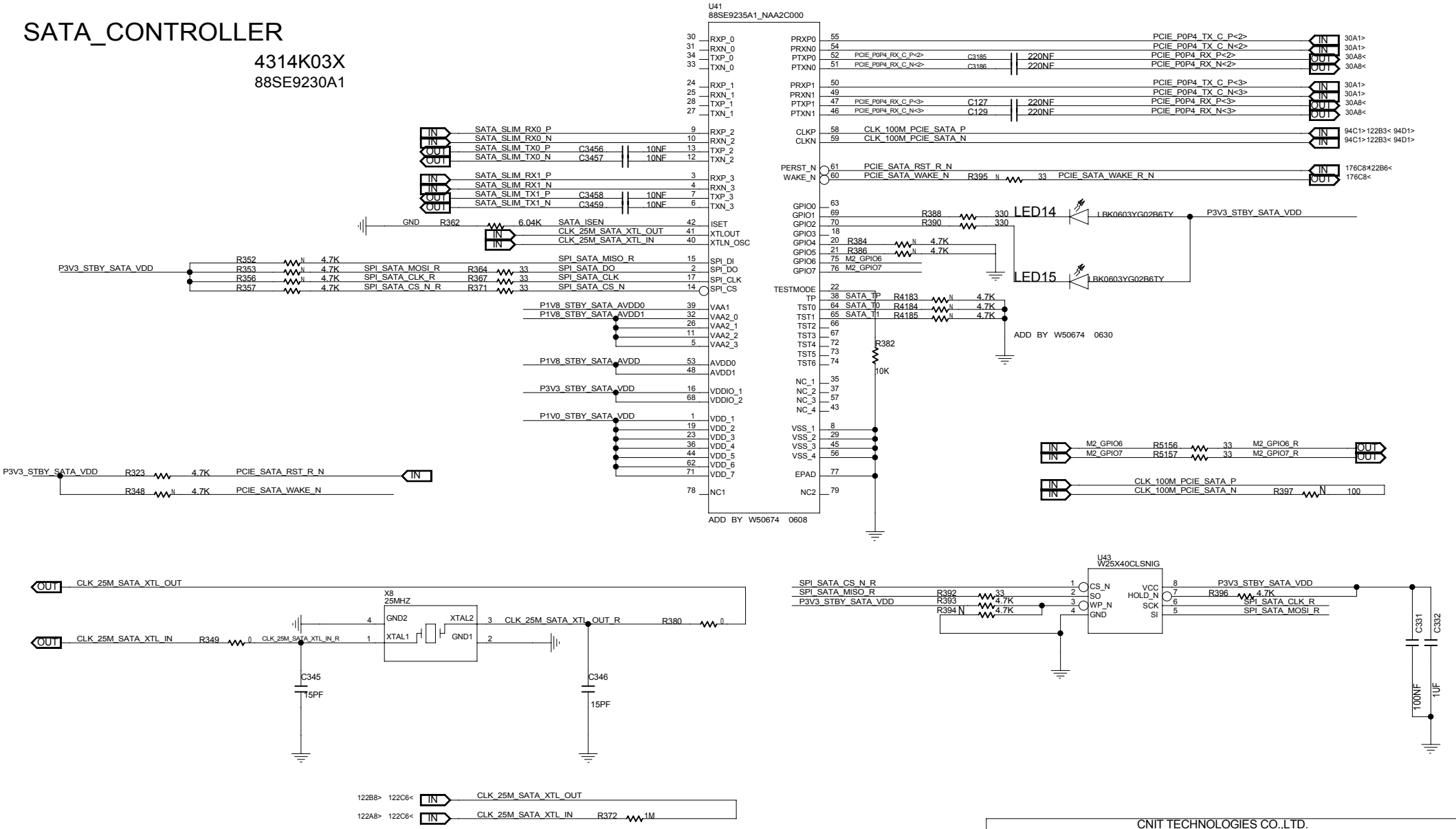

CNIT TECHNOLOGIES CO.,LTD.				
BOARD NAME MB-CADT24D_VERA			DRAWINGNO CNIT0302K1XKDL	
DESIGNED	yujianjiang00259	DATE <DATE_DN>	SHEET 194 OF 200	REV
REVIEWED	<REVIEWED>	DATE <DATE_RW>	Mon Sep 01 14:15:50 2025	

THIS DOCUMENT AND THE TECHNICAL DATA DISCLOSED ARE PROPRIETARY TO CNIT TECHNOLOGIES CO., LTD. AND SHALL NOT BE DUPLICATED USED RELEASED OR DISCLOSED WITHOUT EXPRESSING WRITTEN PERMISSION.

MODULE=---

FUNCTION=---

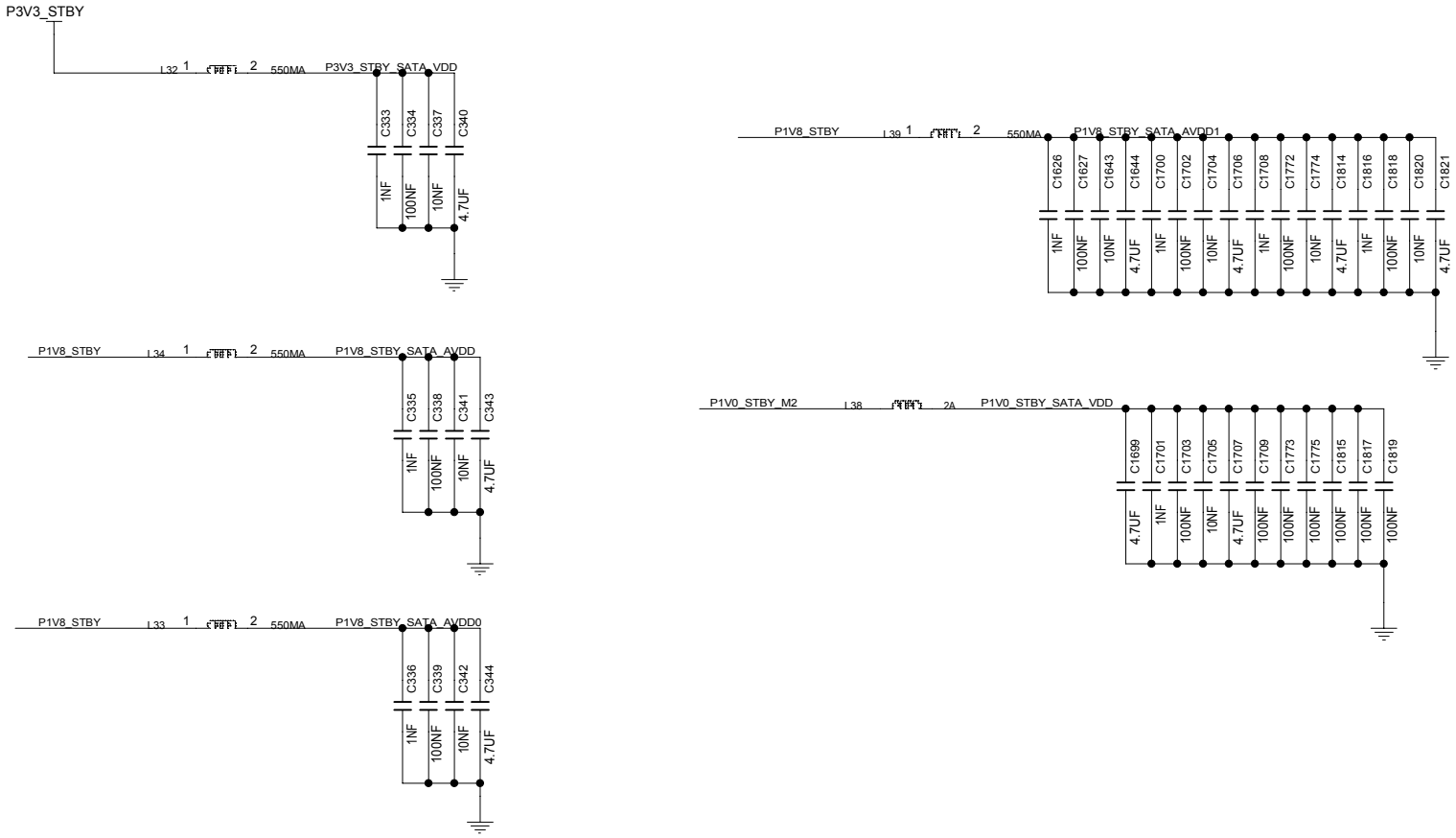

MODULE=---

FUNCTION=---

CNIT TECHNOLOGIES CO.,LTD.				
BOARD NAME MB-CADT24D_VERA			DRAWINGNO CNIT0302K1XKDL	
DESIGNED	yujianjiang00259	DATE <DATE_DN>	SHEET 195 OF 200	REV
REVIEWED	<REVIEWED>	DATE <DATE_RW>	Fri Aug 29 11:22:10 2025	

THIS DOCUMENT AND THE TECHNICAL DATA DISCLOSED ARE PROPRIETARY TO CNIT TECHNOLOGIES CO., LTD. AND SHALL NOT BE DUPLICATED USED RELEASED OR DISCLOSED WITHOUT EXPRESSING WRITTEN PERMISSION.

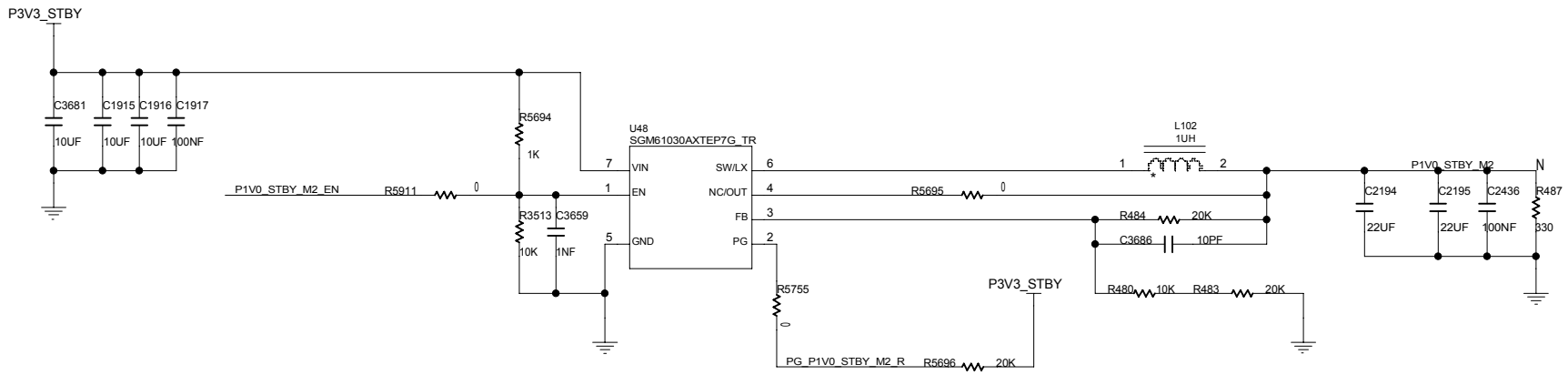

MODULE=---

FUNCTION=---

CNIT TECHNOLOGIES CO.,LTD.				
BOARD NAME MB-CADT24D_VERA			DRAWINGNO CNIT0302K1XKDL	
DESIGNED	yujianjiang00259	DATE <DATE_DN>	SHEET 196 OF 200	REV
REVIEWED	<REVIEWED>	DATE <DATE_RW>	Tue Sep 16 13:39:36 2025	

THIS DOCUMENT AND THE TECHNICAL DATA DISCLOSED ARE PROPRIETARY TO CNIT TECHNOLOGIES CO., LTD. AND SHALL NOT BE DUPLICATED USED RELEASED OR DISCLOSED WITHOUT EXPRESSING WRITTEN PERMISSION.

BIOS_SPI

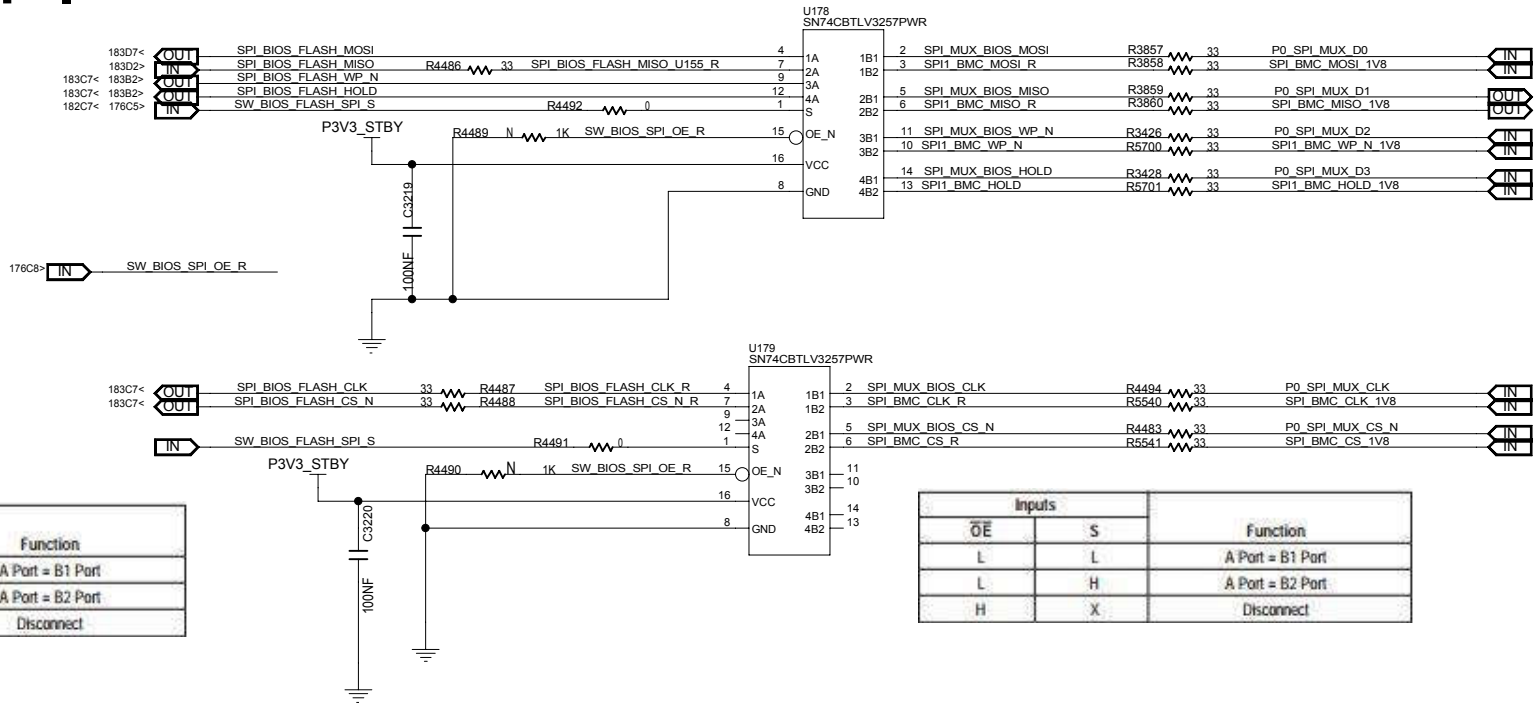

Inputs		Function
$\overline{OE}$	S	
L	L	A Port = B1 Port
L	H	A Port = B2 Port
H	X	Disconnect

Inputs		Function
$\overline{OE}$	S	
L	L	A Port = B1 Port
L	H	A Port = B2 Port
H	X	Disconnect

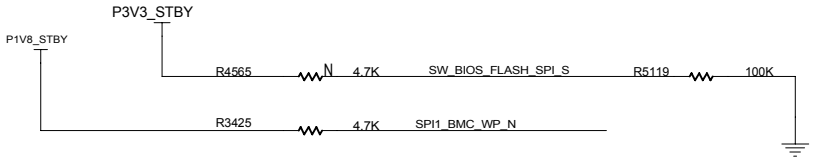

MODULE=---
FUNCTION=---

CNIT TECHNOLOGIES CO.,LTD.				
BOARD NAME MB-CADT24D_VERA			DRAWINGNO CNIT0302K1XKDL	
DESIGNED	yujianjiang00259	DATE <DATE_DN>	SHEET 197 OF 200	REV
REVIEWED	<REVIEWED>	DATE <DATE_RW>	Tue Sep 16 09:02:20 2025	

THIS DOCUMENT AND THE TECHNICAL DATA DISCLOSED ARE PROPRIETARY TO CNIT TECHNOLOGIES CO., LTD. AND SHALL NOT BE DUPLICATED USED RELEASED OR DISCLOSED WITHOUT EXPRESSING WRITTEN PERMISSION.

BIOS_SPI

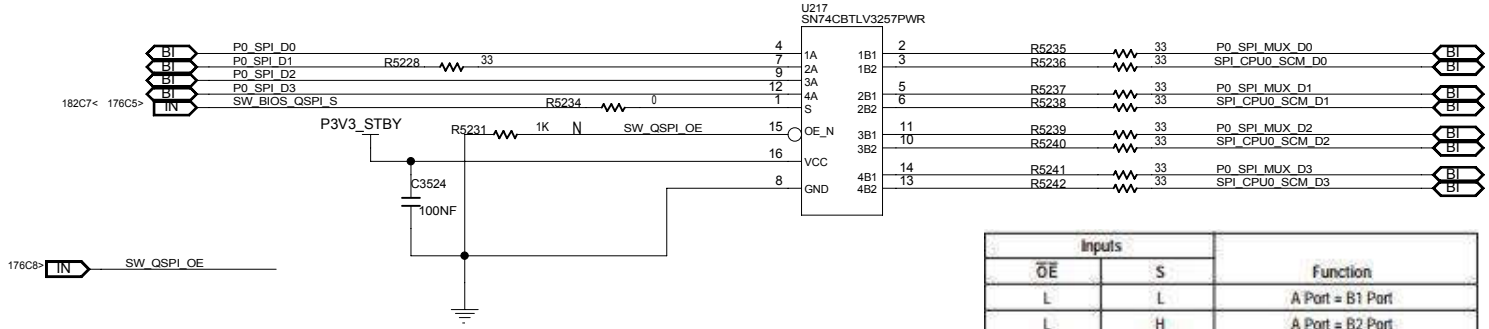

Inputs		Function
$\overline{OE}$	S	
L	L	A Port = B1 Port
L	H	A Port = B2 Port
H	X	Disconnect

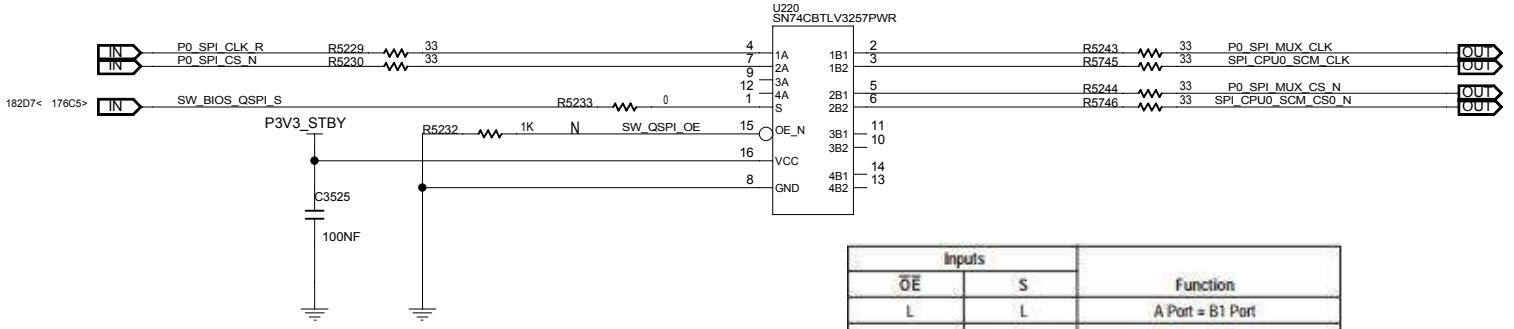

Inputs		Function
$\overline{OE}$	S	
L	L	A Port = B1 Port
L	H	A Port = B2 Port
H	X	Disconnect

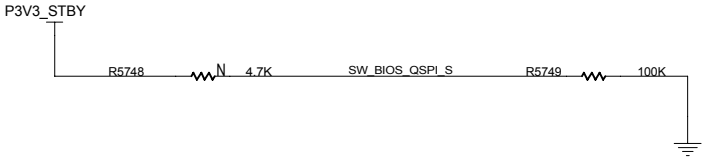

MODULE=---
FUNCTION=---

CNIT TECHNOLOGIES CO.,LTD.				
BOARD NAME MB-CADT24D_VERA			DRAWINGNO CNIT0302K1XKDL	
DESIGNED	yujianjiang00259	DATE <DATE_DN>	SHEET 198 OF 200	REV
REVIEWED	<REVIEWED>	DATE <DATE_RW>	Mon Sep 15 11:29:29 2025	

THIS DOCUMENT AND THE TECHNICAL DATA DISCLOSED ARE PROPRIETARY TO CNIT TECHNOLOGIES CO., LTD. AND SHALL NOT BE DUPLICATED USED RELEASED OR DISCLOSED WITHOUT EXPRESSING WRITTEN PERMISSION.

BIOS_SPI

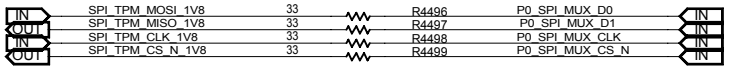

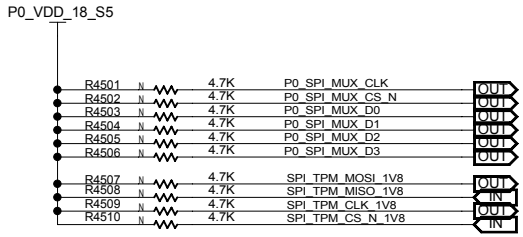

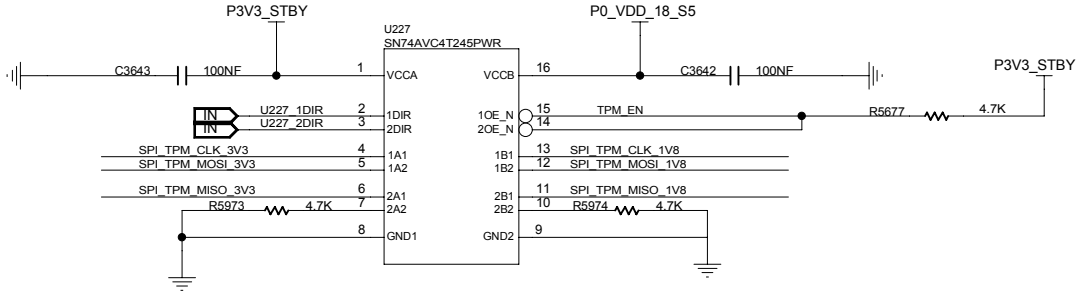

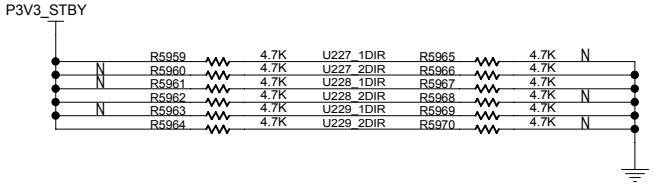

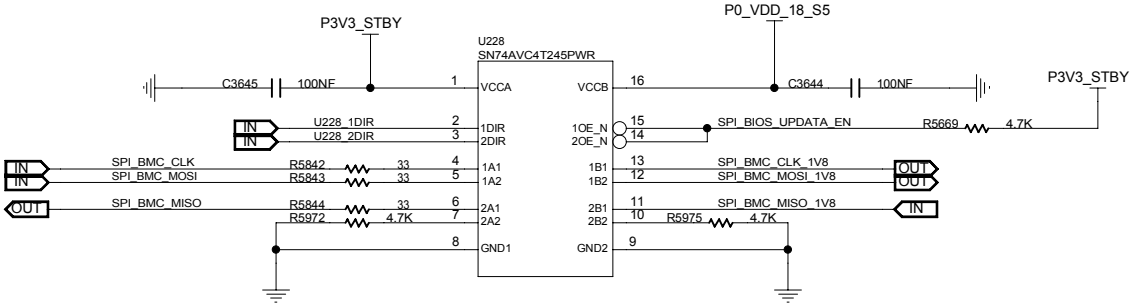

CONTROL INPUTS		OUTPUT CIRCUITS		OPERATION
OE	DIR	A PORT	B PORT	
L	L	Enabled	Hi-Z	B data to A bus
L	H	Hi-Z	Enabled	A data to B bus
H	X	Hi-Z	Hi-Z	Isolation

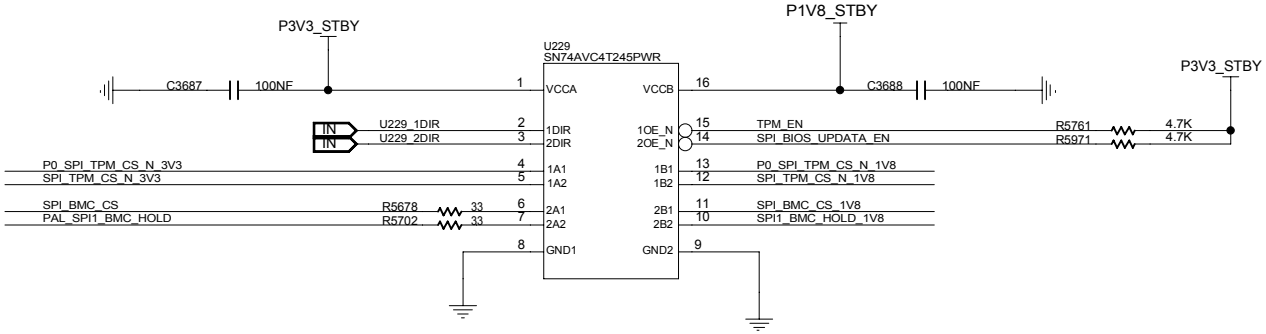

MODULE=---

FUNCTION=---

CNIT TECHNOLOGIES CO.,LTD.				
BOARD NAME MB-CADT24D_VERA			DRAWINGNO CNIT0302K1XKDL	
DESIGNED	yujianjiang00259	DATE <DATE_DN>	SHEET 199 OF 200	REV
REVIEWED	<REVIEWED>	DATE <DATE_RW>	Tue Sep 16 13:37:41 2025	

THIS DOCUMENT AND THE TECHNICAL DATA DISCLOSED ARE PROPRIETARY TO CNIT TECHNOLOGIES CO., LTD. AND SHALL NOT BE DUPLICATED USED RELEASED OR DISCLOSED WITHOUT EXPRESSING WRITTEN PERMISSION.

BIOS_FLASH

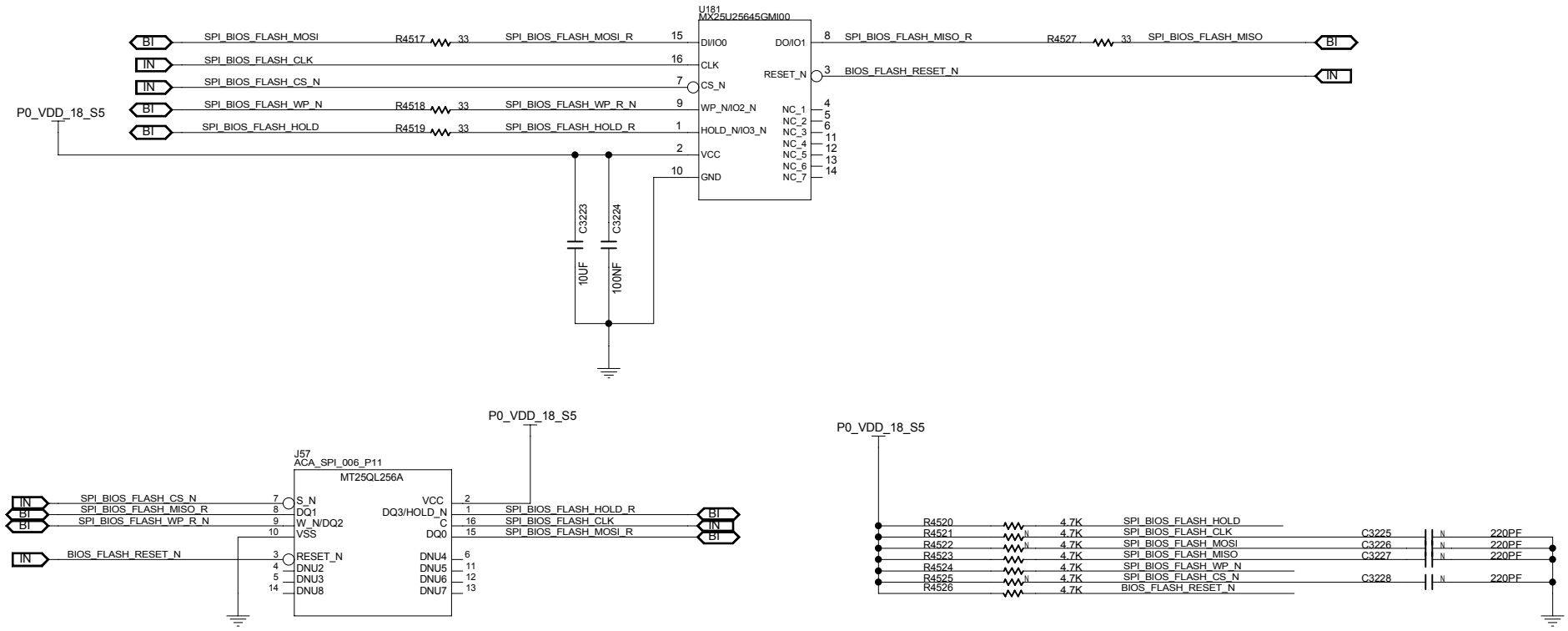

MODULE=---

FUNCTION=---

CNIT TECHNOLOGIES CO.,LTD.				
BOARD NAME MB-CADT24D_VERA			DRAWINGNO CNIT0302K1XKDL	
DESIGNED	yujianjiang00259	DATE <DATE_DN>	SHEET 200 OF 200	REV
REVIEWED	<REVIEWED>	DATE <DATE_RW>	Mon Sep 15 11:29:35 2025	

THIS DOCUMENT AND THE TECHNICAL DATA DISCLOSED ARE PROPRIETARY TO CNIT TECHNOLOGIES CO., LTD. AND SHALL NOT BE DUPLICATED USED RELEASED OR DISCLOSED WITHOUT EXPRESSING WRITTEN PERMISSION.